OMRON

Line Sensor

F3W

Detects Objects in a Variety of Lines and is Ideal for Picking Instruction Purposes

- F3W-A: Detects a wide area with a 10-mm optical pitch.
- F3W-A/F3W-C: Incorporates the industry's first remote external check function making it possible to check sensor errors.
- The industry's first output on-hold function.
- F3W-C: Connector models ensuring easy maintenance are available.

ISO 9001 and 14001 Approved
OMRON Corporation, Ayabe Factory, Sensing Components and Systems

Ordering Information

Appearance	Sensing method	Sensing distance	Optical-axis pitch	No. of optical axes	Protective height (mm)	Model
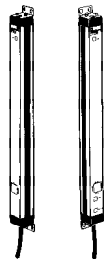 (Cord model)	Through-beam	2 m	10 mm	10	90	F3W-A101
				16	150	F3W-A161
				24	230	F3W-A241
		5 m	20 mm	4	60	F3W-A042
				6	100	F3W-A062
				8	140	F3W-A082
				10	180	F3W-A102
				16	300	F3W-A162
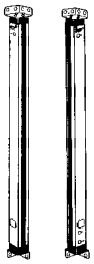 (Connector model)		5 m	40 mm	4	120	F3W-C044
				8	280	F3W-C084
				12	440	F3W-C124
				16	600	F3W-C164
				20	760	F3W-C204
				24	920	F3W-C244
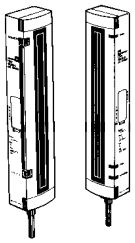 (Picking model)		2 m	25 mm	5	100	F3W-B052
			50 mm	3	100	F3W-B035

■ Accessories (Sold Separately)

Mounting Brackets

Appearance	Model
L-shaped Mounting Bracket (for F3W-C) 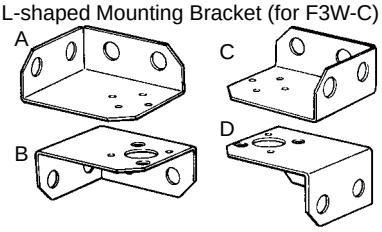	F39-L4 (see note)
L-shaped Mounting Bracket (for F3W-B) 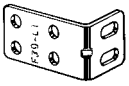	F39-L1
Flat Mounting Bracket (for F3W-B) 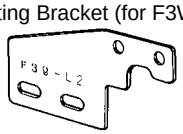	F39-L2

Note: The F39-L4 is a set of Type-A, B, C, and D Mounting Brackets.

Plugs (Connector Models)

Appearance	Overall length	Model
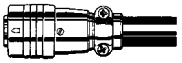 Emitter Plug (Receiver Plug has four pins)	3 m	F39-J1
	7 m	F39-J2

Note: An Emitter Plug and a Receiver Plug are sold together as a pair. Special 10 and 15-m Plugs are available by order. Contact your OMRON representative for price and shipping.

Lens Covers (Acrylic Resin)

Appearance	Model	Applicable model
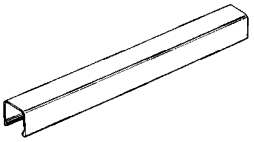	F39-H1	F3W-C044
	F39-H2	F3W-C084
	F39-H3	F3W-C124
	F39-H4	F3W-C164
	F39-H5	F3W-C204
	F39-H6	F3W-C244

Note: An Emitter Lens Cover and a Receiver Lens Cover are sold together as a pair.

Specifications

■ Ratings/Characteristics

Item	F3W-A (cord model)								F3W-C (connector model)						F3W-B (picking model)	
Light source (wavelength)	Infrared LED (880nm)														Infrared LED (950nm)	
Power supply voltage	12 to 24 VDC±10% (ripple range (p-p): 10% max.)															
Current consumption	100 mA max. (Optical axes 16 to 24: 150 mA max. each)															
Sensing distance	2 m			5 m					5 m						2 m	
Optical-axis pitch	10 mm			20 mm					40 mm						25 mm	50 mm
No. of optical axes	10	16	24	4	6	8	10	16	4	8	12	16	20	24	5	3
Protective height	90	150	230	60	100	140	180	300	120	280	440	600	760	920	100	100
Sensing object	Opaque, 14 mm dia. min.			Opaque, 25 mm dia. min.,					Opaque, 50 mm dia. min.						Opaque, 35 mm dia. min.	Opaque, 60 mm dia. min.
Response time (see note 2)	12 ms max.														6 ms max.	
Control output	NPN open collector with 100 mA max. at 30 VDC Residual voltage: 1 V max. at 100 mA and 0.4 V max. at 16 mA															
Operating mode (see note 1)	Dark ON or Light ON (selectable)															
Picking instruction indicator input	---														Open collector with relay or transistor input Indicator ON: Input voltage of 0 to 3 V Indicator OFF: Input voltage of 9 to 30 V or open (with leakage current of 3 mA max.)	

Item		F3W-A (cord model)	F3W-C (connector model)	F3W-B (picking model)
Control output on-hold input		Open collector with relay or transistor input Output on-hold input voltage: 0 to 3 V Output on-hold release (normal operation) voltage: 9 to 30 V or open (with leakage current of 3 mA max.)		
Mutual interference interrupting function (see note 3)		Frequency selector		
External check input (Emitter)		Open collector with relay or transistor input ON: 3 mA min. at 0 to 3 V OFF: 9 to 30 V or open (with leakage current of 3 mA max.)		---
Indicator	**Receiver**	Operation indicator (red LED) Stability indicator (green and red LEDs)		
	Emitter	Light indicator (green LED): Lit when external check input is open		Picking indicator (red LED) (Common to power supply indication)
Connection method		Pre-wired	Connector	Pre-wired
Protection circuit		Reverse-connection and output short protection		
Ambient temperature		Operating: –10° to 55°C (with no icing) Storage: –40° to 70°C		
Ambient humidity		35 to 85% RH (with no condensation)		
Ambient illumination (on Receiver lens)		Incandescent lamps: 3,000 ℓx max. Sunlight: 10,000 ℓx max.		
Insulation resistance		20 MΩ min. (at 500 VDC)		
Dielectric strength		1,000 VAC 50/60 Hz for 1 min		
Degree of protection		IEC60529: IP62		
Vibration resistance		Destruction: 10 to 55 Hz, 1.5-mm double-amplitude for 2 hours each in X, Y and Z directions		
Shock resistance		Destruction: 500 m/s^2 (approx. 50G), 3 times each in X, Y and Z directions		
Materials	**Case**	Aluminum		ABS resin
	Lens	PMMA (acrylic resin)		
	Cord	Oil-resistive cord with 6-mm dia.		Oil-resistive cord with 4-mm dia.
Accessories (Mounting bracket)		Provided		Not provided

Note: 1. Dark-ON mode: Output transistor is ON if one optical axis or more is interrupted.
Output transistor is OFF if no optical axis is interrupted.
Light ON mode: Output transistor is ON if no optical axis is interrupted.
Output transistor is OFF if one optical axis or more is interrupted.

2. The response time may exceed the rated value depending on the operating environment. Refer to *Precautions* for details.
3. Refer to *Precautions* for details.

Engineering Data

■ Parallel Operating Range (Typical)

F3W-A□□1 (10-mm Pitch)

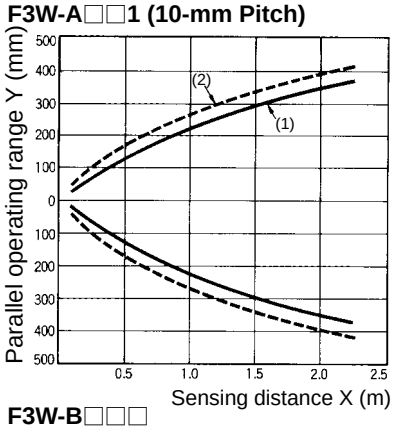

F3W-A□□2 (20-mm Pitch)

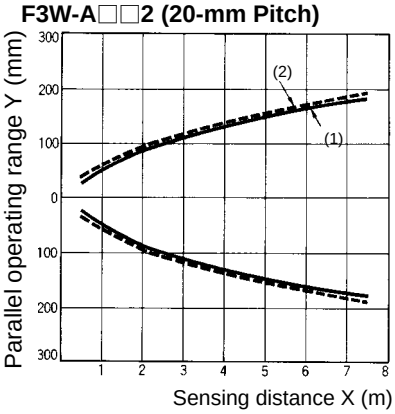

F3W-C□□4 (40-mm Pitch)

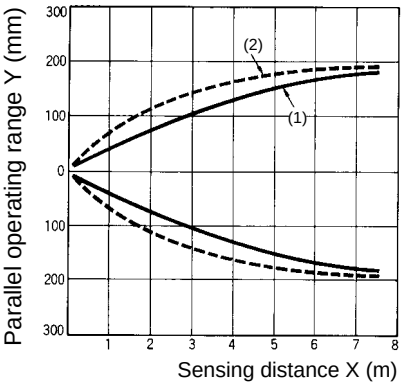

F3W-B□□□

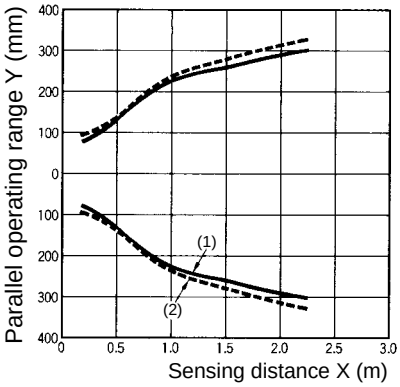

(1) Horizontal Movement Characteristics

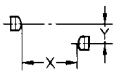

(2) Vertical Movement Characteristics

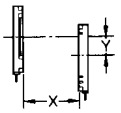

■ Angle Characteristics (Typical)

F3W-A□□1

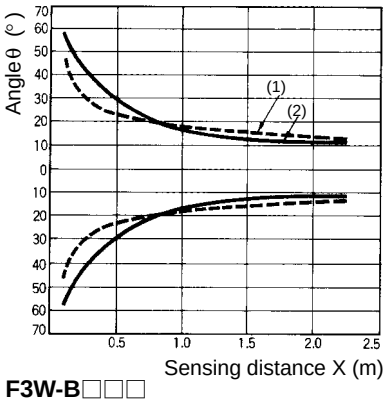

F3W-A□□2

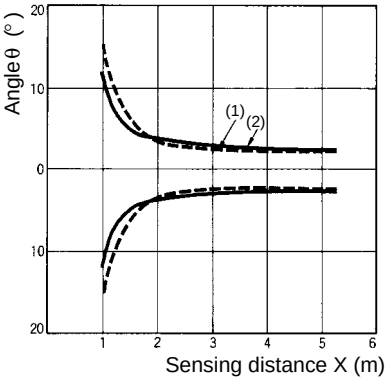

F3W-C□□4

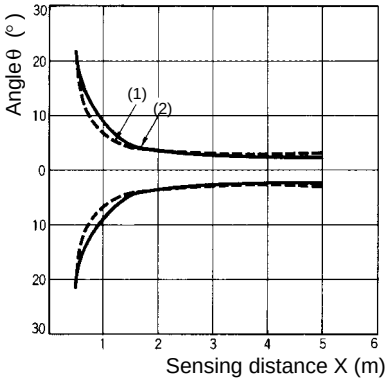

F3W-B□□□

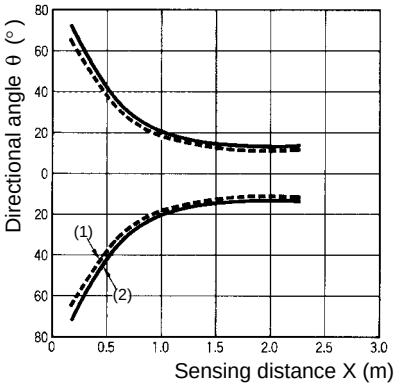

(1) Emitter Angle Characteristics

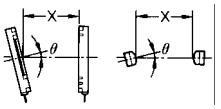

(2) Receiver Angle Characteristics

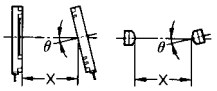

Nomenclature

Emitter
F3W-A-L

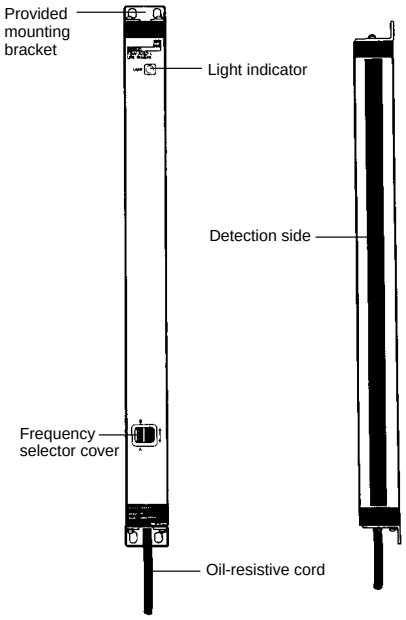

Receiver
F3W-A-D

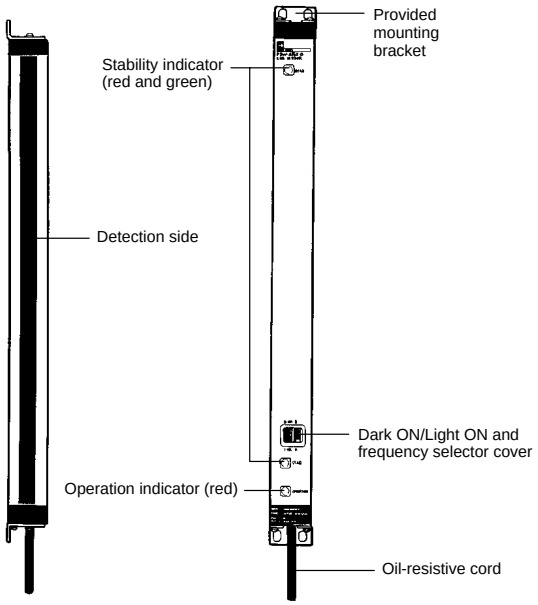

Emitter
F3W-C-L

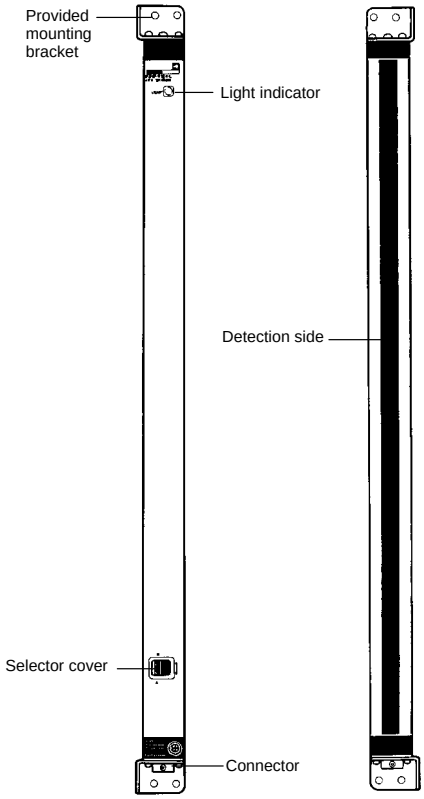

Receiver
F3W-C-D

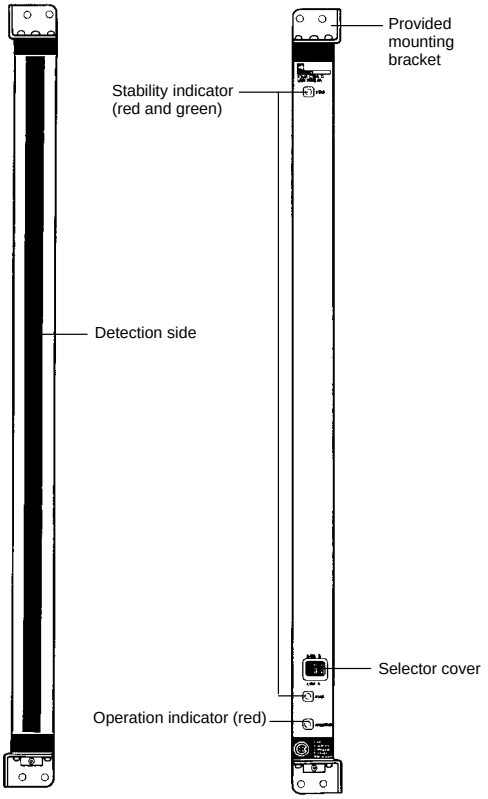

Emitter
F3W-B-L

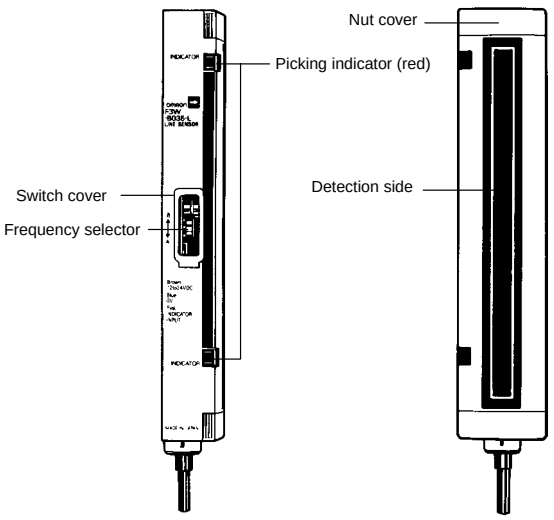

Receiver
F3W-B-D

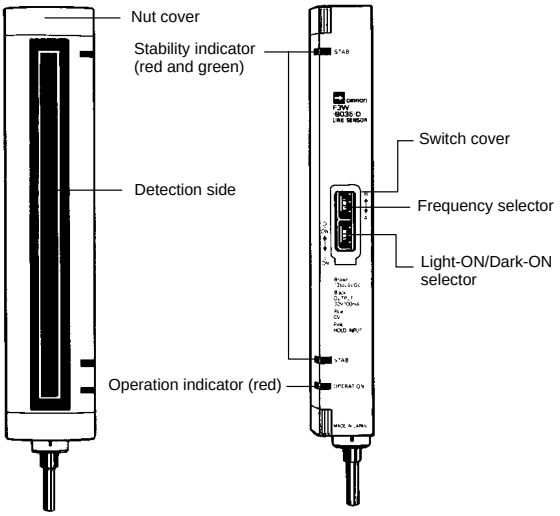

Operation

■ Output Circuits

Receiver
F3W-A□□□-D, F3W-C□□□-D
F3W-B□□□-D

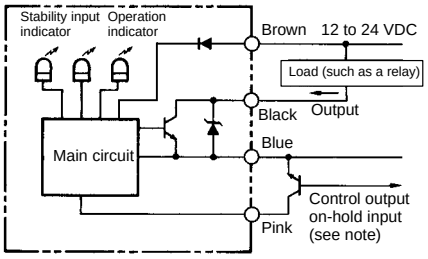

Note: Output will be kept on hold if the terminal is connected to 0V.

Emitter
F3W-A□□□-L, F3W-C□□□-L

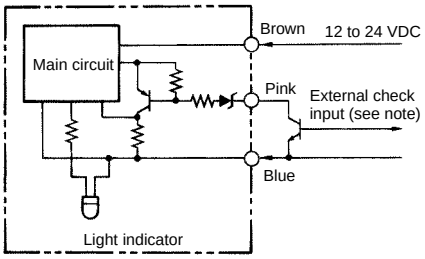

Note: The light indicator will be OFF and the Emitter will stop emitting light if the terminal is connected to 0V. If the terminal is open, the light indicator will be ON and the Emitter will start emitting light.

F3W-B□□□-L

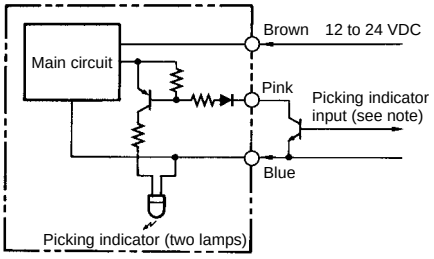

Note: The picking indicator will be ON if the terminal is connected to 0V. If the terminal is open, the picking indicator will be OFF.

Mode selector	State of output transistor	Timing chart
Dark-ON	ON: One optical axis or more is interrupted OFF: No optical axis is interrupted	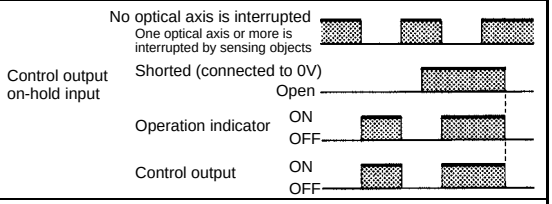
Light-ON	ON: No optical axis is interrupted OFF: One optical axis or more is interrupted	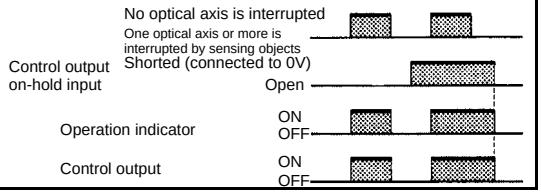

Sensor for Picking Applications

The Sensor turns the picking indicator ON according to an instruction from the Programmable Controller. The Sensor alerts the Programmable Controller of picking errors so that parts will be picked up in correct order according to the assembly process.

Dimensions

Note: All units are in millimeters unless otherwise indicated.

Emitter

F3W-A-L (Emitter with Mounting Bracket)

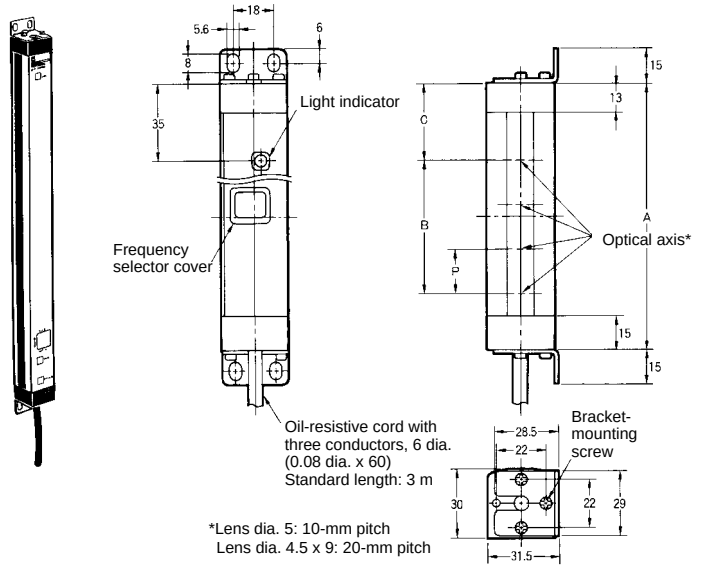

Model	A	B	C	P	Number of optical axes
F3W-A101-L	140	90	25	10	10
F3W-A161-L	200	150	25	10	16
F3W-A241-L	280	230	25	10	24
F3W-A042-L	120	60	35	20	4
F3W-A062-L	160	100	35	20	6
F3W-A082-L	200	140	35	20	8
F3W-A102-L	240	180	35	20	10
F3W-A162-L	360	300	35	20	16

Receiver

F3W-A-D (Receiver with Mounting Bracket)

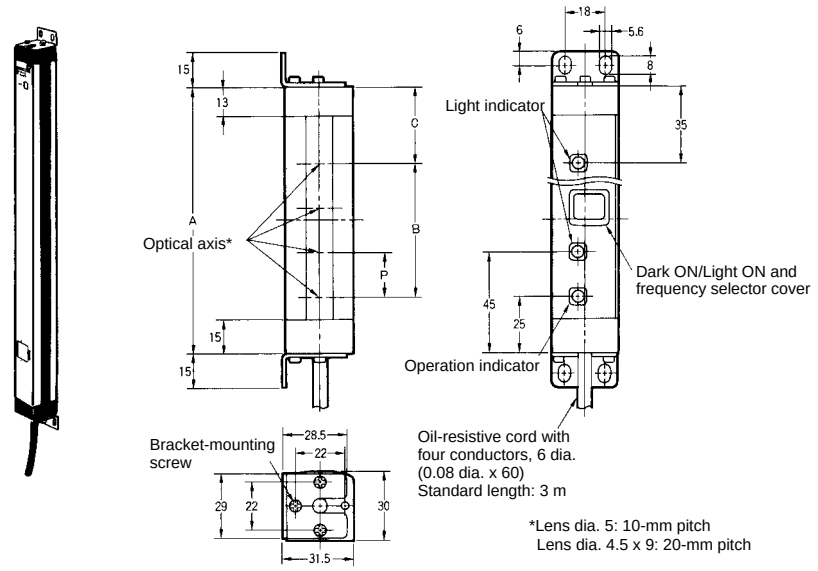

Model	A	B	C	P	Number of optical axes
F3W-A101-D	140	90	25	10	10
F3W-A161-D	200	150	25	10	16
F3W-A241-D	280	230	25	10	24
F3W-A042-D	120	60	35	20	4
F3W-A062-D	160	100	35	20	6
F3W-A082-D	200	140	35	20	8
F3W-A102-D	240	180	35	20	10
F3W-A162-D	360	300	35	20	16

Weight

Model	F3W-A101	F3W-A161	F3W-A241	F3W-A042	F3W-A062	F3W-A082	F3W-A102	F3W-A162
Emitter	Approx. 270 g	Approx. 330 g	Approx. 410 g	Approx. 250 g	Approx. 290 g	Approx. 330 g	Approx. 370 g	Approx. 480 g
Receiver	Approx. 280 g	Approx. 340 g	Approx. 430 g	Approx. 260 g	Approx. 300 g	Approx. 340 g	Approx. 380 g	Approx. 500 g

Emitter

F3W-C-L (Emitter with Mounting Bracket)

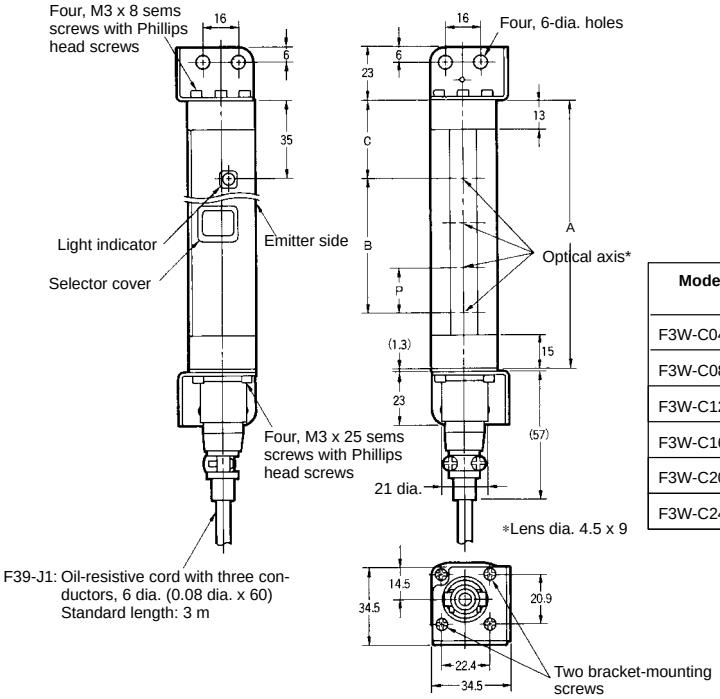

Model	A	B	C	P	Number of optical axes
F3W-C044-L	195	120	20	40	4
F3W-C084-L	355	280	20	40	8
F3W-C124-L	515	440	20	40	12
F3W-C164-L	675	600	20	40	16
F3W-C204-L	835	760	20	40	20
F3W-C244-L	995	920	20	40	24

Receiver

F3W-C-D (Receiver with Mounting Bracket)

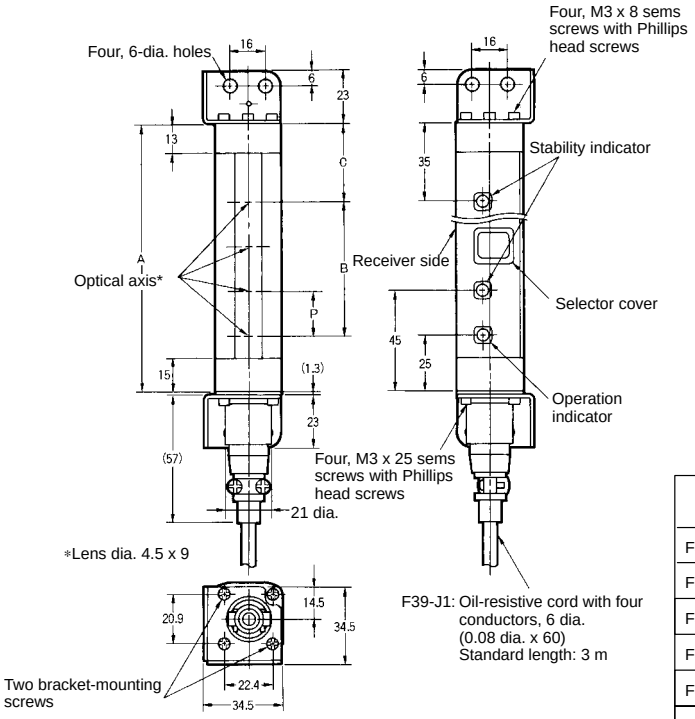

Model	A	B	C	P	Number of optical axes
F3W-C044-D	195	120	20	40	4
F3W-C084-D	355	280	20	40	8
F3W-C124-D	515	440	20	40	12
F3W-C164-D	675	600	20	40	16
F3W-C204-D	835	760	20	40	20
F3W-C244-D	995	920	20	40	24

Weight

Model	F3W-C044	F3W-C084	F3W-C124	F3W-C164	F3W-C204	F3W-C244
Emitter	Approx. 210 g	Approx. 370 g	Approx. 520 g	Approx. 670 g	Approx. 820 g	Approx. 970 g
Receiver	Approx. 210 g	Approx. 380 g	Approx. 530 g	Approx. 680 g	Approx. 830 g	Approx. 990 g

Emitter

F3W-B-L

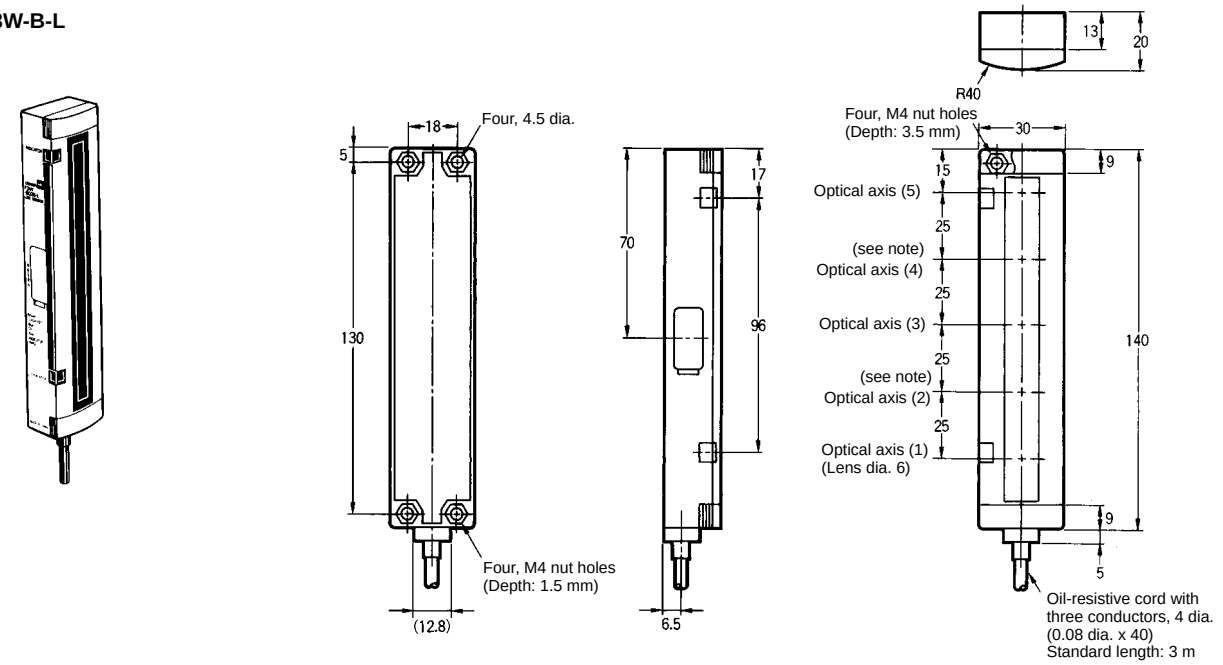

Note: The F3W-B035-L three-axis model does not have optical axis 2 or 4.

Receiver

F3W-B-D

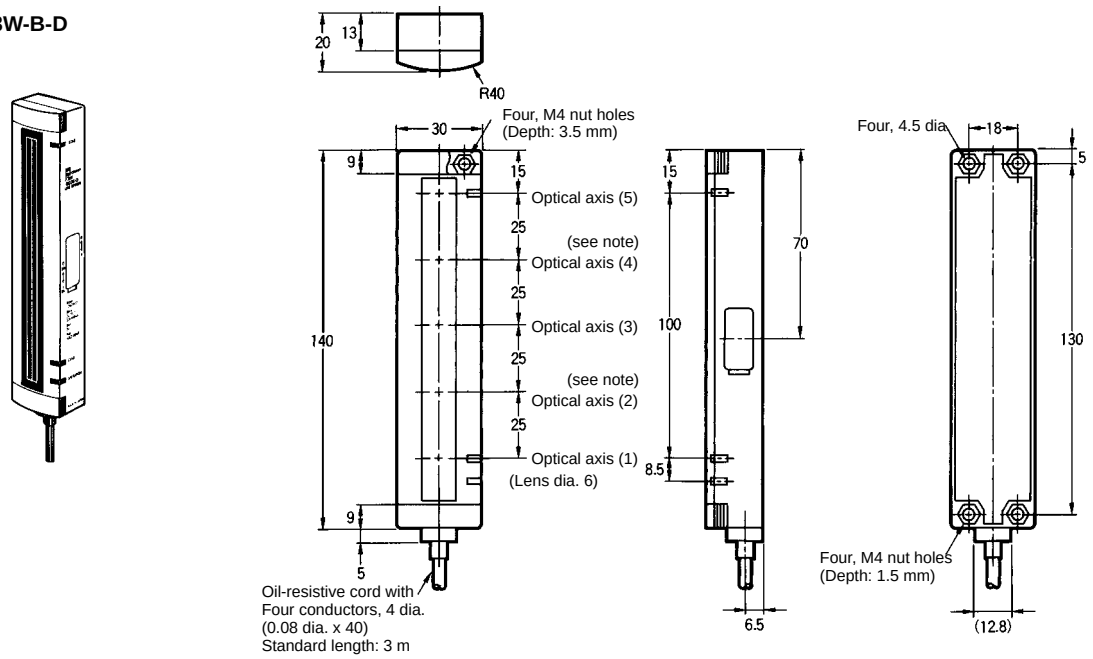

Note: The F3W-B035-D three-axis model does not have optical axis 2 or 4.

Weight

Model	F3W-B035	F3W-B052
Emitter	Approx. 120 g	Approx. 120 g
Receiver	Approx. 130 g	Approx. 140 g

■ Accessories

Mounting Brackets

∗Specify the model number when purchasing Mounting Brackets.

F39-L3 Standard Mounting Brackets∗
(For F3W-A)

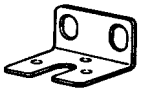

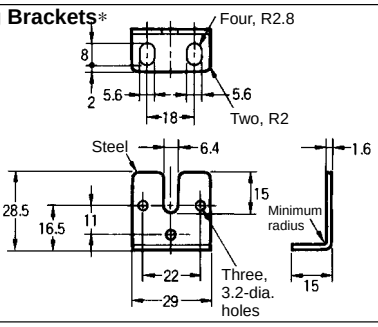

F39-L5 Standard Mounting Brackets∗
F3W-C (with Types A, B, C, and D)

Type A

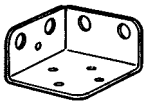

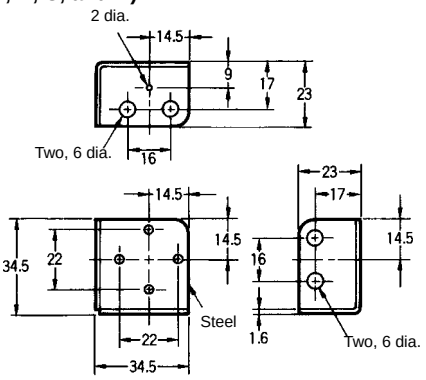

Type B

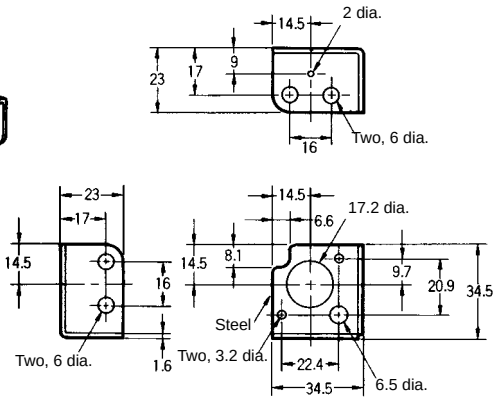

Type C

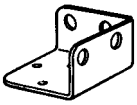

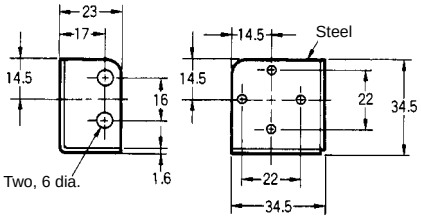

Type D

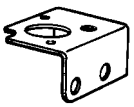

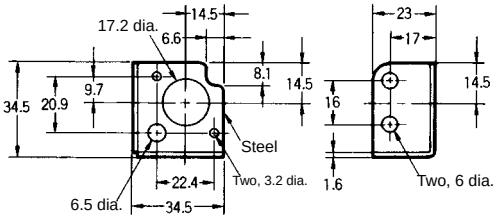

■ Accessories (Sold Separately)

Plugs (Connector Model Use)

Two Plugs, one each for the Emitter and Receiver are sold together.

F39-J1 (3 m)
F39-J2 (7 m)

Emitter Use

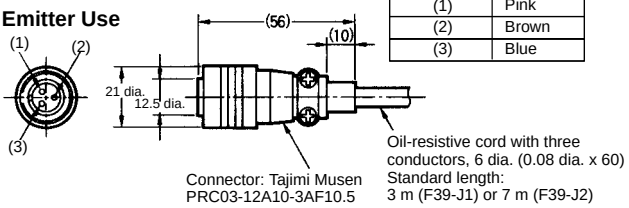

Pin number	Wire color
(1)	Pink
(2)	Brown
(3)	Blue

Receiver Use

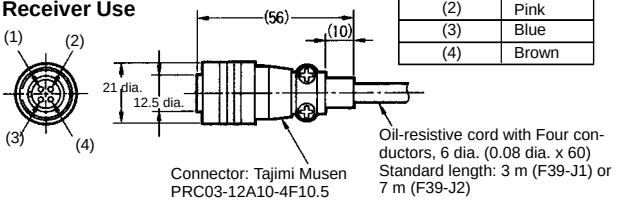

Pin number	Wire color
(1)	Black
(2)	Pink
(3)	Blue
(4)	Brown

Lens Cover (Acrylic)

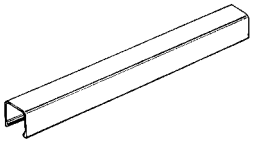

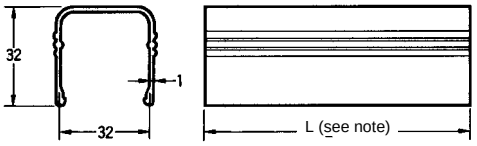

Note: The following lengths are available.

Model	Length L (mm)
F39-H1	165
F39-H2	325
F39-H3	485
F39-H4	645
F39-H5	805
F39-H6	965

Mounting Brackets (Sold Separately)

F39-L4 (For F3W-C)

Type A

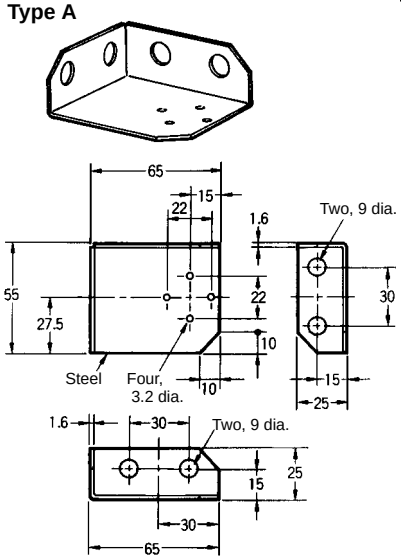

Type B

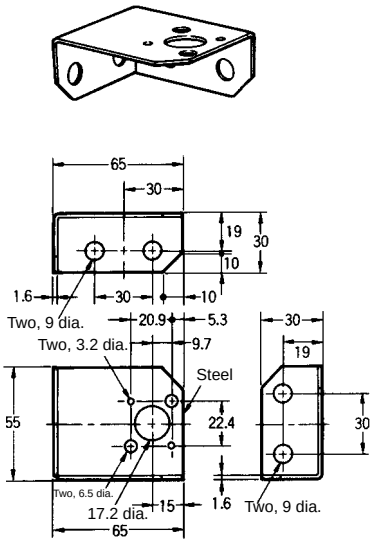

Emitter with Mounting Bracket

F3W-C□□□-L (Emitter)

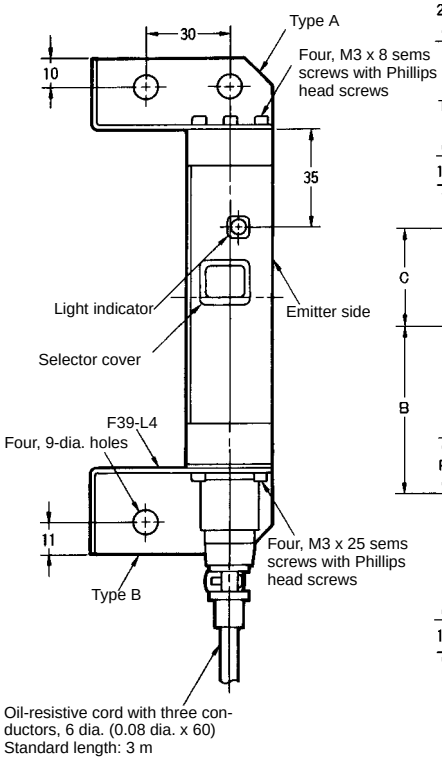

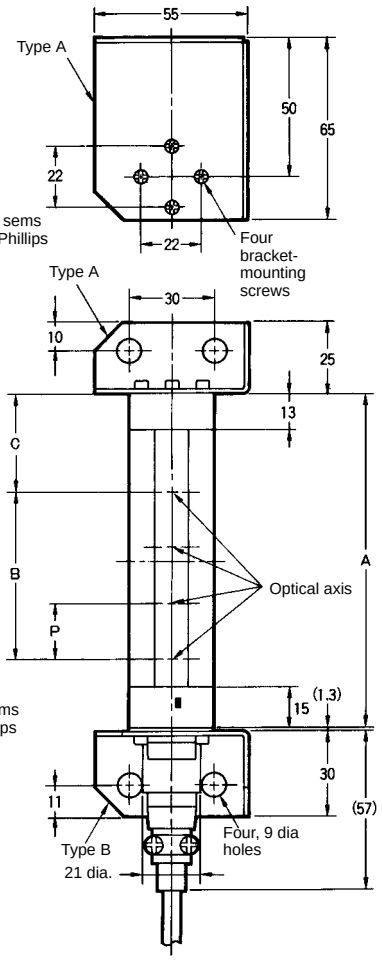

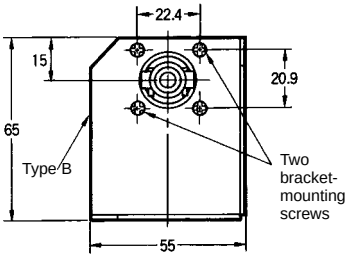

Model	A	B	C	P	Number of optical axes
F3W-C044-L	195	120	20	40	4
F3W-C084-L	355	280	20	40	8
F3W-C124-L	515	440	20	40	12
F3W-C164-L	675	600	20	40	16
F3W-C204-L	835	760	20	40	20
F3W-C244-L	995	920	20	40	24

Mounting Brackets (Sold Separately)

F39-L4 (For F3W-C)

Type C

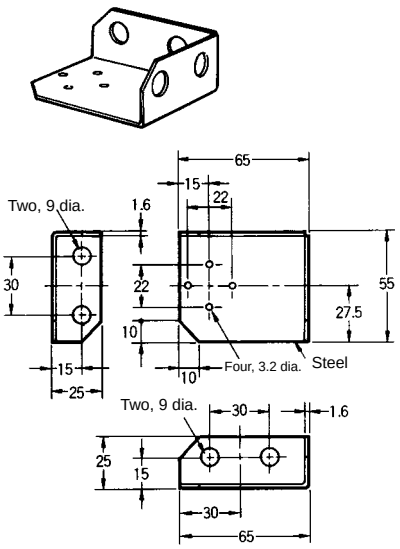

Type D

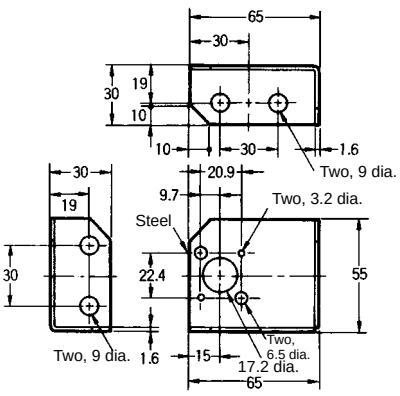

Receiver with Mounting Bracket

F3W-C□□□-D (Receiver)

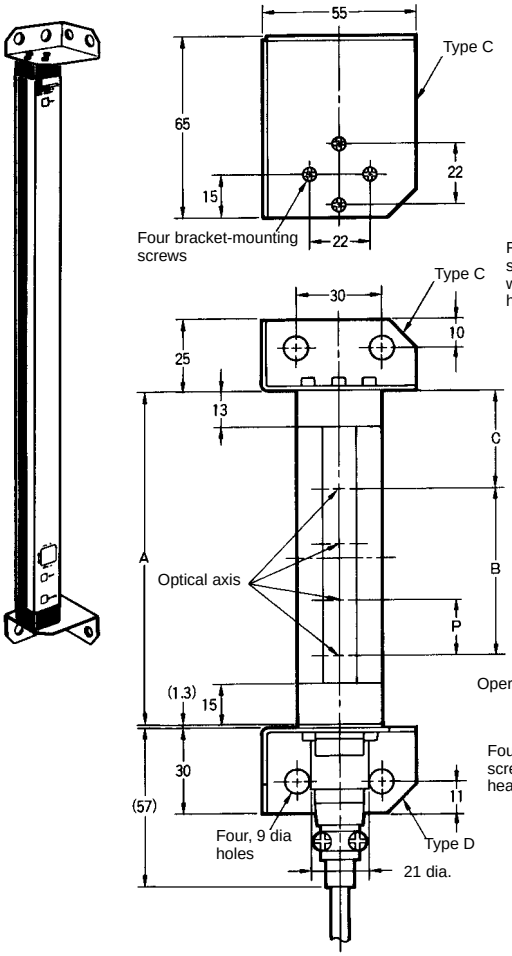

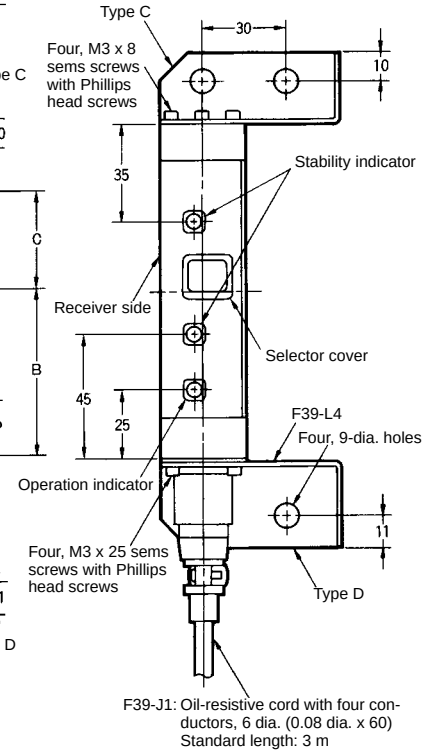

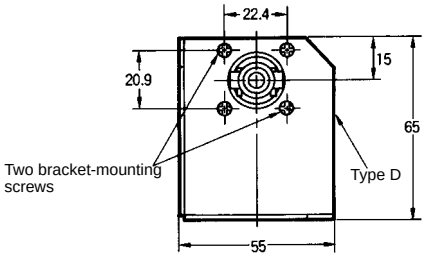

Model	A	B	C	P	Number of optical axes
F3W-C044-D	195	120	20	40	4
F3W-C084-D	355	280	20	40	8
F3W-C124-D	515	440	20	40	12
F3W-C164-D	675	600	20	40	16
F3W-C204-D	835	760	20	40	20
F3W-C244-D	995	920	20	40	24

L-shaped Mounting Bracket (Sold Separately)

F39-L1 (For F3W-B)

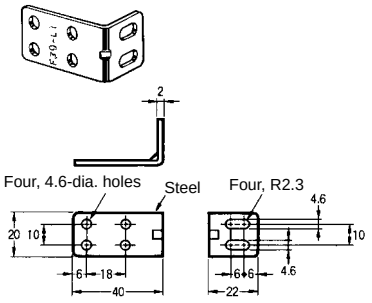

Set includes:
Four Mounting Brackets
Eight, M4 x 20 sems screws
Eight, M4 nuts

With Mounting Bracket

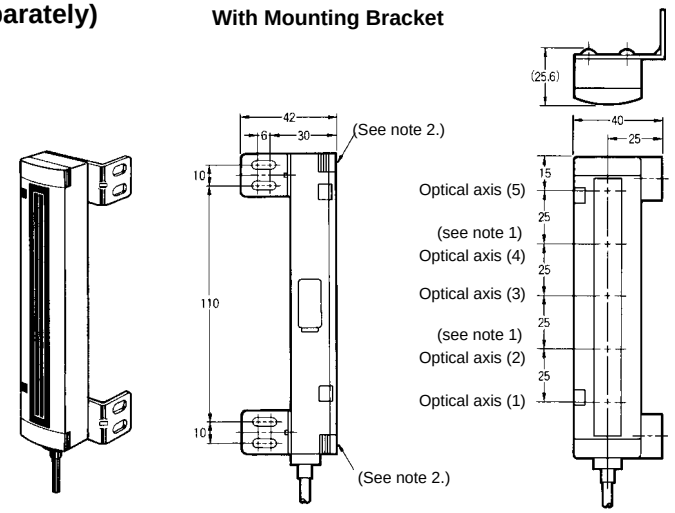

Note: 1. The F3W-B035 three-axis model does not have optical axis 2 or 4.
2. There are nut holes under the nut cover, where the provided nuts are to be inserted.

Flat Mounting Bracket (Sold Separately)

F39-L2 (For F3W-B)

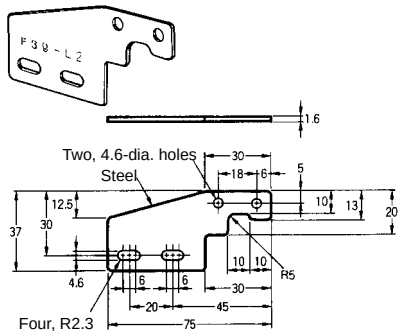

Mounted to Detection Side

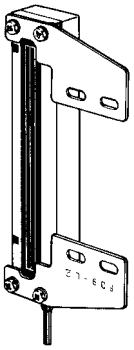

With Mounting Bracket

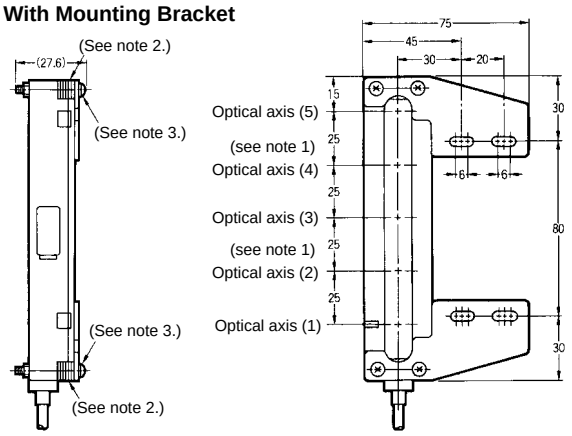

Note: 1. The F3W-B035 three-axis model does not have optical axis 2 or 4.
2. Remove the nut cover of the casing and attach the provided spacer.
3. Use the longer screws of the provided M4 x 25 screws.

Set includes:
Four Mounting Brackets
Eight, M4 x 25 sems screws (for detection-side mounting)
Eight, M4 x 20 sems screws (for rear-side mounting)
Eight, M4 nuts
Four, spacers for detection-side mounting

Spacer
Remove the nut cover before attaching the spacer to the detection side of the F39-L2.

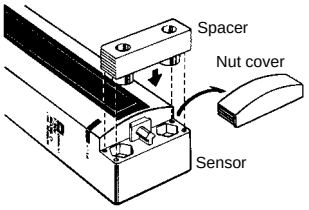

Mounted to Rear Side

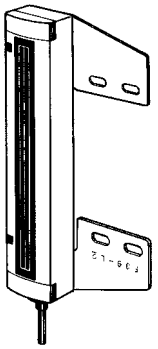

With Mounting Bracket

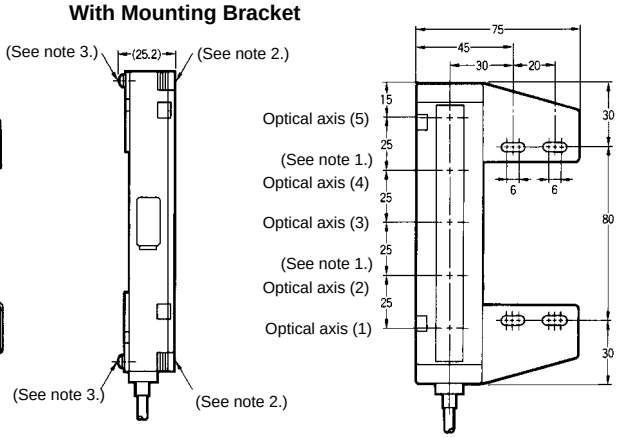

Note: 1. The F3W-B035 three-axis model does not have optical axis 2 or 4.
2. There are nut holes under the nut cover, where the provided nuts are inserted.
3. Use the shorter screws of the provided M4 x 20 screws.

Installation

■ Connections

F3W-A, F3W-B, or F3W-C with S3D2 Sensor Controller

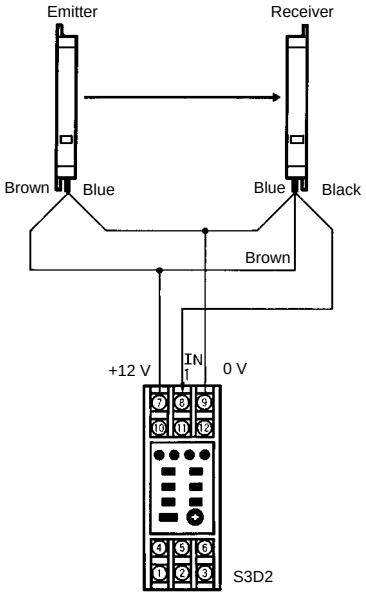

Note: Supply 200 mA max. to the S3D2. A single F3W with 16 to 24 axes can be connected to the S3D2.

F3W-A or F3W-C with External Check Input

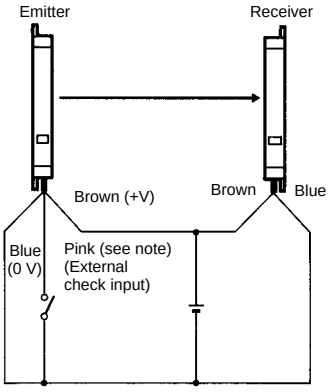

Note: The Emitter will stop emitting light if the 0V external check input is connected. The light indicator will turn ON and the Emitter will start emitting light if the terminal is open.

F3W-B with Picking Input

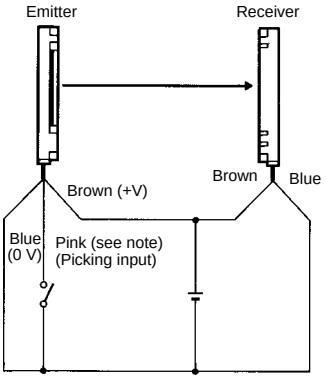

Note: The picking indicator will turn ON if 0V is connected to the terminal. The picking indicator will turn OFF if the terminal is open.

Precautions

⚠ WARNING

Do not apply the F3W as safety mechanisms used in pressing machines or any other safety mechanisms for protecting the human body from danger.

1. Do not apply the F3W as safety mechanisms used in pressing machines, shears, rolling machines, spinning machines, cotton mill machines, or robots for the protection of an operator's hands and body.
2. The F3W is designed for detection of the human body or moving objects in the detection area but not for protection against danger.
3. The F3W or any product incorporating the F3W may be exported to any country. Should the F3W cause any problem conflicting with the local law or related to product liability locally, however, OMRON shall, without exception, assume responsible for it.

⚠ Caution

Before using more than on F3W Unit in parallel, take necessary countermeasures against mutual interference so that the Units will not malfunction. Refer to *Installation Conditions for Prevention of Mutual Interference*.

If the F3W is located within 1 m from the wall or floor, the optical axes may not be interrupted properly due to light reflection from the wall or floor. Refer to *Reflection from Wall or Floor*.

Supply Voltage

Make sure that the supply voltage is within the rated range. If the supply voltage is not within the rated range or 100 VAC is imposed on a DC Sensor model, the Sensor may be damaged or malfunction.

Load Short-circuiting

Do not short-circuit the load, otherwise the Sensor may explode or burn.

Wrong Wiring

Do not make mistakes in the polarity of power supply or wiring, otherwise the Sensor may be damaged or malfunction.

Connection without Load

Make sure that the load is connected to the Sensor in operation, otherwise the Sensor may be damaged or malfunction.

■ Correct Use

(1) Stability Indicator of Receiver

Install the Receiver so that the green stability indicators on the upper and lower sides of the Receiver are both ON.

The stability indicators indicate the incident levels of the detection axes on the edges. The incident level of no other detection axis is indicated by the stability indicators.

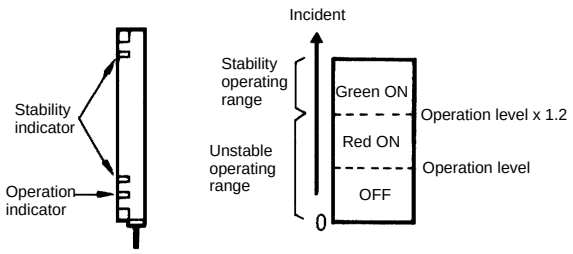

If the axis for sync signal detection is interrupted, the stability indicator will turn OFF because the Emitter and Receiver cannot be in sync operation. They will, however, operate normally.

(2) Installation Orientation

Install the Emitter and Receiver in the same orientation.

Cord Pullout Direction

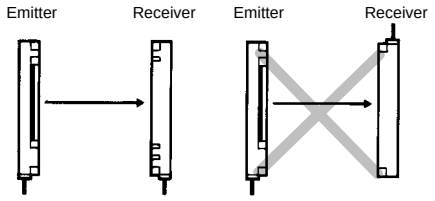

(3) Reflection from Wall or Floor

If the Emitter and Receiver are installed as shown in the following illustration, all the axes may not be interrupted due to light reflection from the floor or wall. Make sure that the Emitter and Receiver detect the sensing object properly before using the F3W in actual operation.

Side View

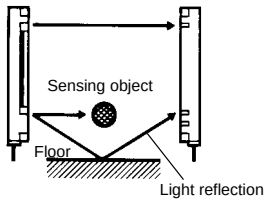

Top View

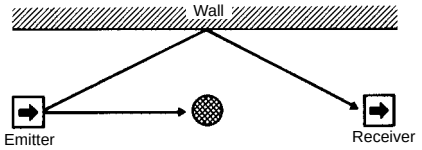

(4) Mutual Interference Interrupting Function

The F3W has two emitting frequencies. Select either one of them with the frequency selector under the following *Installation Conditions For The Prevention Of Mutual Interference* if more than one F3W Unit is used, otherwise the Units may malfunction.

Set the frequency selectors of both the Emitter and Receiver of each F3W to A or B. The frequency selector is under the switch cover on the side of the F3W. Make sure that there is no difference in set frequency between the Emitter and Receiver of each F3W.

F3W-A or F3W-C

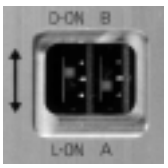

F3W-B

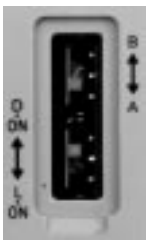

(5) Installation Conditions for Prevention of Mutual Interference

1. Optical Axis for Synchronization

The Receiver has single-axis optical emission for the Emitter for sync operation use. Therefore, the following installation conditions are required.

- Emitting Direction

  Make sure to install the Emitters and Receivers so that there will be no directional difference in optical emission, otherwise the optical emission needed for the Receivers to be in sync operation may be affected and the system may malfunction.

Top View

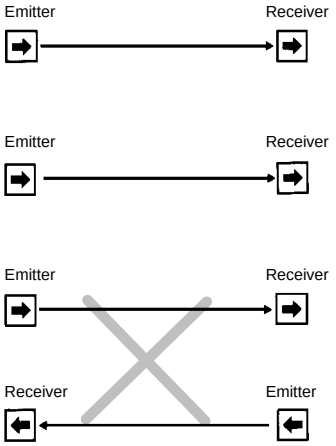

- The Receiver has single-axis optical emission as shown in the following illustrations so that the Receiver and Emitter will be in sync operation. Make sure that the optical emission is received by the Receiver without being interfered by the optical emission of a Photoelectric Sensor or any other device, otherwise the F3W may malfunction.

F3W-B: Optical Axis in the Middle

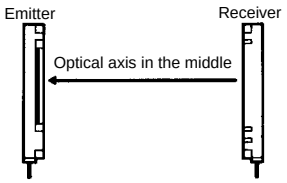

F3W-A or F3W-C:
Second from the Bottom Optical Axis

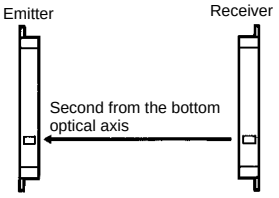

2. Parallel Installation

- Make sure to keep the following distances between the adjacent pairs of Emitters and Receivers installed in parallel as shown below.

Vertical Installation

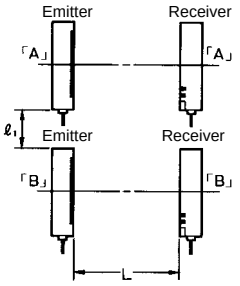

Note: The "A" or "B" next to each Emitter or Receiver indicates the frequency selection of the Emitter or Receiver.

Distances between Emitters and Receivers

Model	ℓ_1 (mm)	L (m)
F3W-A□□1	600 mm min.	At 2 m
F3W-A□□2	300 mm min.	At 5 m
F3W-C□□4	300 mm min.	At 5 m
F3W-B□□□	600 mm min.	At 2 m

Horizontal Installation

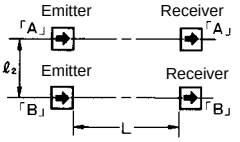

Note: The "A" or "B" next to each Emitter or Receiver indicates the frequency selection of the Emitter or Receiver.

Distances between Emitters and Receivers

Model	ℓ_2 (mm)	L (m)
F3W-A□□1	600 mm min.	At 2 m
F3W-A□□2 F3W-C□□4	300 mm min.	At 5 m
F3W-B□□□	600 mm min.	At 2 m

3. Installation in a Single Optical Line

- If more than one F3W is used in a single optical line, use a baffle as shown below so that there will be no mutual interference between F3Ws. If there is light reflection from the floor or wall, install additional baffles to prevent the F3Ws from light reflection.

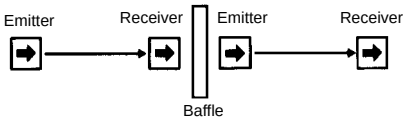

(6) Removal of Switch Cover

The switch cover on the side of the F3W can be removed by inserting the tip of a flat-blade screwdriver into the space between the switch cover and casing and move the switch cover upwards. Be sure to attach the switch cover after setting the switch.

(7) Mounting

Do not strike the F3W with a hammer or any other tool during the installation, otherwise the internal circuitry of the F3W may be damaged.

F3W-B

Be sure to attach the nut cover as shown below.

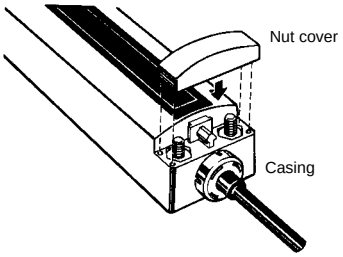

F3W-C

The Mounting Brackets provided or sold separately consists of four types (i.e., A, B, C, and D). Be sure to assemble them as shown below.

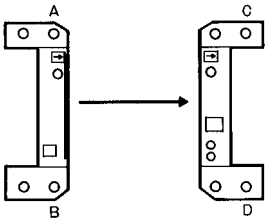

ALL DIMENSIONS SHOWN ARE IN MILLIMETERS.
To convert millimeters into inches, multiply by 0.03937. To convert grams into ounces, multiply by 0.03527.

Read and Understand This Catalog

Please read and understand this catalog before purchasing the products. Please consult your OMRON representative if you have any questions or comments.

Warranty and Limitations of Liability

WARRANTY
OMRON's exclusive warranty is that the products are free from defects in materials and workmanship for a period of one year (or other period if specified) from date of sale by OMRON.

OMRON MAKES NO WARRANTY OR REPRESENTATION, EXPRESS OR IMPLIED, REGARDING NON-INFRINGEMENT, MERCHANTABILITY, OR FITNESS FOR PARTICULAR PURPOSE OF THE PRODUCTS. ANY BUYER OR USER ACKNOWLEDGES THAT THE BUYER OR USER ALONE HAS DETERMINED THAT THE PRODUCTS WILL SUITABLY MEET THE REQUIREMENTS OF THEIR INTENDED USE. OMRON DISCLAIMS ALL OTHER WARRANTIES, EXPRESS OR IMPLIED.

LIMITATIONS OF LIABILITY
OMRON SHALL NOT BE RESPONSIBLE FOR SPECIAL, INDIRECT, OR CONSEQUENTIAL DAMAGES, LOSS OF PROFITS, OR COMMERCIAL LOSS IN ANY WAY CONNECTED WITH THE PRODUCTS, WHETHER SUCH CLAIM IS BASED ON CONTRACT, WARRANTY, NEGLIGENCE, OR STRICT LIABILITY.

In no event shall responsibility of OMRON for any act exceed the individual price of the product on which liability is asserted.

IN NO EVENT SHALL OMRON BE RESPONSIBLE FOR WARRANTY, REPAIR, OR OTHER CLAIMS REGARDING THE PRODUCTS UNLESS OMRON'S ANALYSIS CONFIRMS THAT THE PRODUCTS WERE PROPERLY HANDLED, STORED, INSTALLED, AND MAINTAINED AND NOT SUBJECT TO CONTAMINATION, ABUSE, MISUSE, OR INAPPROPRIATE MODIFICATION OR REPAIR.

Application Considerations

SUITABILITY FOR USE
OMRON shall not be responsible for conformity with any standards, codes, or regulations that apply to the combination of products in the customer's application or use of the product.

At the customer's request, OMRON will provide applicable third party certification documents identifying ratings and limitations of use that apply to the products. This information by itself is not sufficient for a complete determination of the suitability of the products in combination with the end product, machine, system, or other application or use.

The following are some examples of applications for which particular attention must be given. This is not intended to be an exhaustive list of all possible uses of the products, nor is it intended to imply that the uses listed may be suitable for the products:

- Outdoor use, uses involving potential chemical contamination or electrical interference, or conditions or uses not described in this catalog.
- Nuclear energy control systems, combustion systems, railroad systems, aviation systems, medical equipment, amusement machines, vehicles, safety equipment, and installations subject to separate industry or government regulations.
- Systems, machines, and equipment that could present a risk to life or property.

Please know and observe all prohibitions of use applicable to the products.

NEVER USE THE PRODUCTS FOR AN APPLICATION INVOLVING SERIOUS RISK TO LIFE OR PROPERTY WITHOUT ENSURING THAT THE SYSTEM AS A WHOLE HAS BEEN DESIGNED TO ADDRESS THE RISKS, AND THAT THE OMRON PRODUCT IS PROPERLY RATED AND INSTALLED FOR THE INTENDED USE WITHIN THE OVERALL EQUIPMENT OR SYSTEM.

Disclaimers

CHANGE IN SPECIFICATIONS
Product specifications and accessories may be changed at any time based on improvements and other reasons.

It is our practice to change model numbers when published ratings or features are changed, or when significant construction changes are made. However, some specifications of the product may be changed without any notice. When in doubt, special model numbers may be assigned to fix or establish key specifications for your application on your request. Please consult with your OMRON representative at any time to confirm actual specifications of purchased product.

DIMENSIONS AND WEIGHTS
Dimensions and weights are nominal and are not to be used for manufacturing purposes, even when tolerances are shown.

ERRORS AND OMISSIONS
The information in this catalog has been carefully checked and is believed to be accurate; however, no responsibility is assumed for clerical, typographical, or proofreading errors, or omissions.

PERFORMANCE DATA
Performance data given in this catalog is provided as a guide for the user in determining suitability and does not constitute a warranty. It may represent the result of OMRON's test conditions, and the users must correlate it to actual application requirements. Actual performance is subject to the OMRON Warranty and Limitations of Liability.

PROGRAMMABLE PRODUCTS
OMRON shall not be responsible for the user's programming of a programmable product, or any consequence thereof.

COPYRIGHT AND COPY PERMISSION
This catalog shall not be copied for sales or promotions without permission.

This catalog is protected by copyright and is intended solely for use in conjunction with the product. Please notify us before copying or reproducing this catalog in any manner, for any other purpose. If copying or transmitting this catalog to another, please copy or transmit it in its entirety.

Cat. No. D085-E1-1

2007.3

OMRON Corporation
Industrial Automation Company

http://www.ia.omron.com/

In the interest of product improvement, specifications are subject to change without notice.