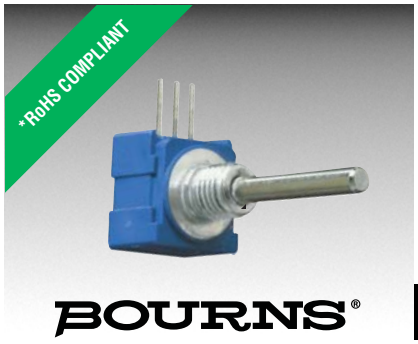


## Features

- RoHS compliant*
- Conductive plastic or cermet
- Linear and audio tapers
- PC board and bushing mount
- Gangable
- Metal bushing and shaft
- Sealed for board washing

BOURNS® PRO AUDIO

# 51/53 - Sealed 1/2 ” (12.5 mm) Square Control

| Electrical Characteristics[1] | Conductive Plastic | Cermet |
|---|---|---|
| Standard Resistance Range | | |
| Linear | 1 K ohms to 1 megohm | 150 ohms to 1 megohm |
| Audio | 1 K ohms to 1 megohm | 1 K ohms to 1 megohm |
| Total Resistance Tolerance | | |
| Linear Tapers | ±10 % or ±20 % | ±10 % or ±5 % |
| Audio Tapers | ±10 % or ±20 % | ±10 % |
| Independent Linearity | ±5 % | ±5 % |
| Absolute Minimum Resistance | 2 ohms maximum | 2 ohms maximum |
| Effective Electrical Angle | 270 ° ±5 ° | 270 ° ±5 ° |
| Contact Resistance Variation | 2 % | 2 % |
| Dielectric Withstanding Voltage (MIL-STD-202 – Method 301) | | |
| Sea Level | 1,500 VAC minimum | 1,500 VAC minimum |
| 70,000 | 500 VAC minimum | 500 VAC minimum |
| Insulation Resistance | 1,000 megohms minimum | 1,000 megohms minimum |
| Power Rating At 70 °C (Derate To 0 At 125 °C) | | |
| (Voltage Limited By Power Dissipation or 350 VAC, Whichever Is Less) | | |
| Linear Tapers | 0.5 watt | 1.0 watt |
| Audio Tapers | 0.25 watt | 0.5 watt |
| Theoretical Resolution | Essentially infinite | Essentially infinite |

| Environmental Characteristics[1] | | |
|---|---|---|
| Operating Temperature Range | +1 °C to +125 °C | +1 °C to +125 °C |
| Storage Temperature Range | -55 °C to +125 °C | -55 °C to +125 °C |
| Temperature Coefficient Over Storage Temperature Range | ±1,000 ppm/°C | ±150 ppm/°C |
| Vibration (Single Section) | 15 G | 15 G |
| Total Resistance Shift | ±2 % maximum | ±2 % maximum |
| Voltage Ratio Shift | ±5 % maximum | ±5 % maximum |
| Shock (Single Section) | 30 G | 30 G |
| Total Resistance Shift | +2 % maximum | ±2 % maximum |
| Voltage Ratio Shift | ±5 % maximum | ±5 % maximum |
| Load Life | 1,000 hours | 1,000 hours |
| Total Resistance Shift | ±10 % TRS maximum | ±5 % TRS maximum |
| Rotational Life (No Load) | 50,000 cycles | 25,000 cycles |
| Total Resistance Shift | ±10 % TRS maximum | ±10 % TRS maximum |
| Contact Resistance Variation @ 25,000 Cycles | ±2 % | ±4 % |
| Moisture Resistance (MIL-STD-202, Method 103, Condition B) | | |
| Total Resistance Shift | ±10 % TRS | ±5 % TRS |
| IP Rating | IP 64 | IP 64 |

| Mechanical Characteristics | |
|---|---|
| Stop Strength | 56 N-cm (5 lb.-in.) |
| Mechanical Angle | 290 ° ±5 ° |
| Torque | |
| Starting (All Sections) | Running torque +0.35 N-cm (+0.5 oz.-in.) maximum |
| Running (Single Section) | 0.15 to 1.4 N-cm (0.2 to 2.0 oz.-in.) |
| Running (Dual or Triple Section) | 0.35 to 1.8 N-cm (0.5 to 2.5 oz.-in.) |
| Mounting (Torque on Bushing) | 1.7 to 2.0 N-m (15 to 18 lb.-in.) maximum |
| Weight (Single Section) | 5.5 grams |
| (Each Additional Section) | 3.0 grams |
| Terminals | PC pin or solder lug |
| Soldering Condition | Recommended hand soldering using Sn95/Ag5 no clean solder, 0.025 ” wire diameter. Maximum temperature 399 °C (750 °F) for 3 seconds. No wash process to be used with no clean flux. Part can be wave soldered at 260 °C (500 °F) for 5 seconds, no wash process with no clean flux. |
| Marking | Manufacturer’s trademark, part number, resistance value and date code. |
| Ganging (Multiple Section Potentiometers) | 6 cups maximum |
| Hardware | One lockwasher and one mounting nut is shipped with each potentiometer, except where noted in the part number. |

[1]At room ambient: +25 °C nominal and 50 % relative humidity nominal, except as noted.

*RoHS Directive 2002/95/EC Jan 27 2003 including Annex
Specifications are subject to change without notice.
Customers should verify actual device performance in their specific applications.

## Product Dimensions

### PACKAGE DIMENSIONS

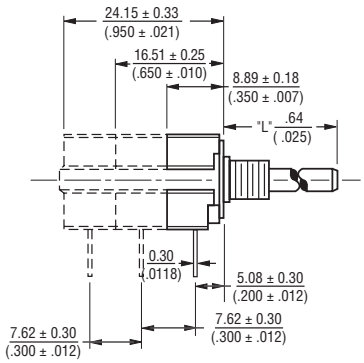


(SINGLE, DUAL AND TRIPLE MODULE SHOWN)
AVAILABLE IN 1 THROUGH 6 MODULE VERSIONS.

### MODEL 51

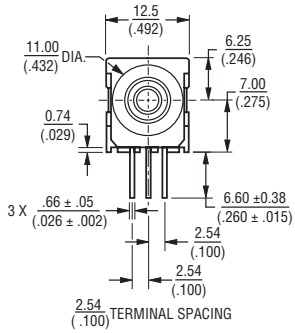


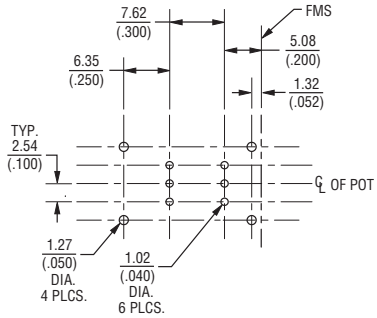


(DOUBLE MODULE FRONT AND REAR BRACKET SHOWN)

### PACKAGE DIMENSIONS PCB MOUNTING BRACKET

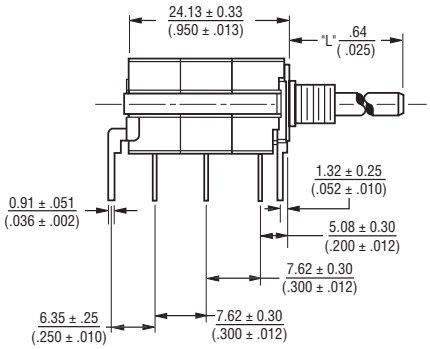


AVAILABLE IN 1 THROUGH 6 MODULE VERSIONS.

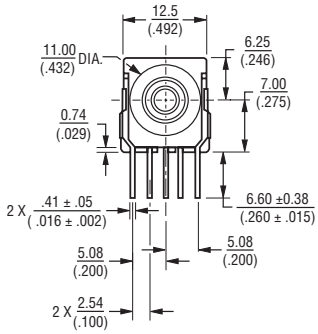


### SOLDER LUG TERMINALS MODEL 53

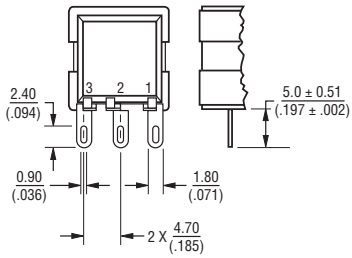


### ELECTRICAL SCHEMATIC

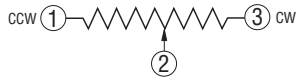


### ANTI-ROTATION LUG
(Style "A", 90 CW Shown)

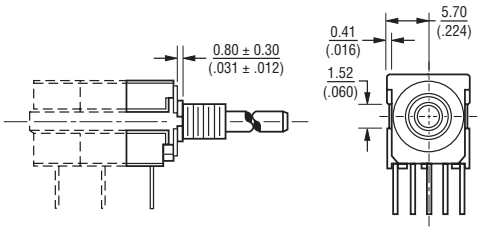


DIMENSIONS: MM / (INCHES)

### SHAFT FLAT ORIENTATION

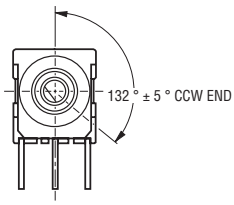


### SUGGESTED PANEL LAYOUTS

The Model 50 can be used with either of the two panel layouts shown below.

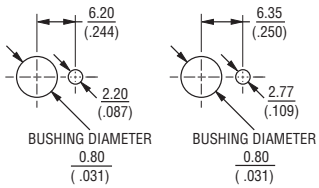


FOR TOLERANCES SHOWN: .XX = ± .25 (.010)
.XXX = ± .13 (.005)
SHAFT DIMENSIONS ± .80 (1/32)

Specifications are subject to change without notice.
Customers should verify actual device performance in their specific applications.

# 51/53 - Sealed 1/2 ” (12.5 mm) Square Control

BOURNS®

## Shaft/Bushing Styles

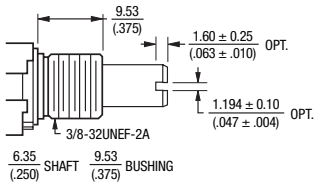


**A Style Bushing**

| STD. LENGTH ‘L’ | |
|---|---|
| .500 | (12.7) |
| .625 | (15.88) |
| .750 | (19.05) |
| .875 | (22.23) |
| 1.000 | (25.4) |

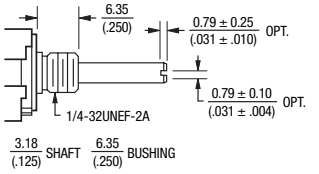


**C Style Bushing**

| STD. LENGTH ‘L’ | |
|---|---|
| .375 | (9.53) |
| .500 | (12.7) |
| .625 | (15.88) |
| .750 | (19.05) |
| .875 | (22.23) |
| 1.000 | (25.4) |

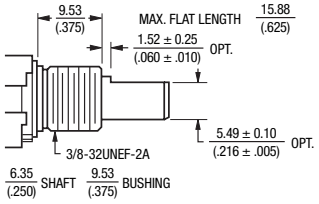


**A Style Bushing - Flatted Shaft**

| STD. LENGTH ‘L’ | |
|---|---|
| .625 | (15.88) |
| .750 | (19.05) |
| .875 | (22.23) |
| 1.000 | (25.4) |

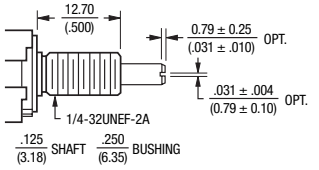


**F Style Bushing**

| STD. LENGTH ‘L’ | |
|---|---|
| .625 | (15.88) |
| .750 | (19.05) |
| .875 | (22.23) |
| 1.000 | (25.4) |

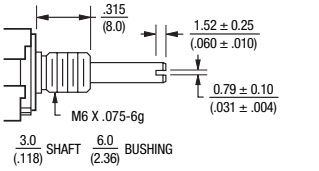


**S Style Bushing**

| STD. LENGTH ‘L’ | |
|---|---|
| .394 | (10.0) |
| .512 | (13.0) |
| .630 | (16.0) |
| .866 | (22.0) |
| .984 | (25.0) |

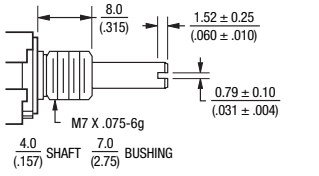


**U Style Bushing**

| STD. LENGTH ‘L’ | |
|---|---|
| .394 | (10.0) |
| .512 | (13.0) |
| .630 | (16.0) |
| .866 | (22.0) |
| .984 | (25.0) |

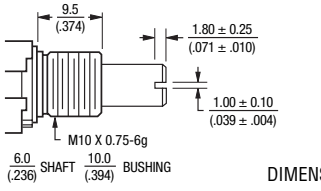


**R Style Bushing**

| STD. LENGTH ‘L’ | |
|---|---|
| .512 | (13.0) |
| .630 | (16.0) |
| .866 | (22.0) |
| .984 | (25.0) |

DIMENSIONS: MM (INCHES)

## How To Order

| 51 | A | A | D | - | B | 28 | - | A | 15 | L |
|---|---|---|---|---|---|---|---|---|---|---|

**RoHS IDENTIFIER**

| Code | Description |
|---|---|
| L | Compliant |

**MOUNTING BRACKET/ ANTI-ROTATION LUG**

| Code | Description |
|---|---|
| **A** | **AR Lug 90 °CW** |
| C | AR Lug 270 °CW |
| **D** | **No AR Lug or Bracket** |
| L | Front Bracket |
| M | Rear Bracket |
| N | Front and Rear Bracket |

**# SECTIONS/DETENTS**

| Code | Description |
|---|---|
| **A** | **Single No Detent** |
| B | Double No Detent |
| C | Triple No Detent |
| D | Quad No Detent |
| E | Single w/Center Detent |
| F | Double w/Center Detent |
| G | Triple w/Center Detent |
| H | Quad w/Center Detent |
| J | Five Section |
| K | Six Section |
| L | Five Section w/Detent |
| M | Six Section w/Detent |

**BUSHING CONFIGURATION**

| Code | Description |
|---|---|
| **A** | **3/8 ” D x 3/8 ” L** |
| **C** | **1/4 ” D x 1/4 ” L** |
| F | 1/4 ” D x 1/2 ” L |
| **R** | **10 mm D x 9.5 mm L** |
| **S** | **6 mm D x 8 mm L** |
| **U** | **7 mm D x 8 mm L** |

**MODEL**

| Code | Description |
|---|---|
| **51** | **PC Pins (.100 ” centers)** |
| **53** | **Solder Lugs** |

**ELEMENT TAPER TYPE/TOLERANCE** / **RESISTANCE (CODE)** — VALUE IN OHMS

| Code | Description | | |
|---|---|---|---|
| **(A)** | **Linear Cermet ±10 %** | (28) — 150 | (14) — 7.5 K |
| (H) | Linear Cermet ±5 % | (06) — 200 | **(15) — 10 K** |
| | | (07) — 250 | (30) — 15 K |
| | | (08) — 500 | (16) — 20 K |
| | | (09) — 750 | (17) — 25 K |
| | | **(10) — 1 K** | **(18) — 50 K** |
| | | (29) — 1.5 K | (19) — 75 K |
| | | (11) — 2 K | **(20) — 100 K** |
| | | (12) — 2.5 K | (23) — 500 K |
| | | **(13) — 5 K** | (25) — 1 M |
| **(B)** | **Linear C-P ±20 %** | **(10) — 1 K** | **(18) — 50 K** |
| (E) | Linear C-P ±10 % | (12) — 2.5 K | **(20) — 100 K** |
| | | **(13) — 5 K** | (22) — 250 K |
| | | **(15) — 10 K** | (23) — 500 K |
| | | (16) — 20 K | (25) — 1 M |
| | | (17) — 25 K | |
| (C) | CW Audio Cermet ±10 % | (10) — 1 K | (18) — 50 K |
| | | (12) — 2.5 K | (20) — 100 K |
| (F) | CCW Audio Cermet ±10 % | (13) — 5 K | (23) — 500 K |
| | | (15) — 10 K | (25) — 1 M |
| | | (17) — 25 K | |
| **(D)** | **CW Audio C-P ±20 %** | **(10) — 1 K** | **(18) — 50 K** |
| (S) | CW Audio C-P ±10 % | (12) — 2.5 K | **(20) — 100 K** |
| | | **(13) — 5 K** | (22) — 250 K |
| | | **(15) — 10 K** | (23) — 500 K |
| | | (17) — 25 K | (25) — 1 M |
| (G) | CCW Audio C-P ±20 % | (10) — 1 K | (18) — 50 K |
| | | (12) — 2.5 K | (20) — 100 K |
| (T) | CCW Audio C-P ±10 % | (13) — 5 K | (22) — 250 K |
| | | (15) — 10 K | (23) — 500 K |
| | | (17) — 25 K | (25) — 1 M |
| (Y) | CW Dual Audio Taper C-P ±20 % | (10) — 1 K | (18) — 50 K |
| | | (12) — 2.5 K | (20) — 100 K |
| | | (13) — 5 K | (22) — 250 K |
| | | (15) — 10 K | (23) — 500 K |
| | | (17) — 25 K | (25) — 1 M |

**SHAFT TYPE** / **AVAILABLE ONLY IN BUSHINGS** / **AVAILABLE ONLY IN LENGTHS**

| Code | Description | Code | Description |
|---|---|---|---|
| A | Single Plain 1/4 ”D | A | 20,24,28,32 |
| **B** | **Single Slotted 1/4 ”D** | **A** | 12,16,20,**24,28**,32 |
| C | Single Flatted 1/4 ”D | A | 20,24,28,32 |
| D | Single Plain 1/8 ”D | C, F | 16,20,24,28,32 |
| **E** | **Single Slotted 1/8 ”D** | **C, F** | 12,16,20,**24,28**,32 |
| **R** | **Single Slotted 6 mmD** | **R** | 10,13,16,22,**25** |
| **T** | **Single Slotted 4 mmD** | **U** | 10,13,16,22,**25** |
| **U** | **Single Slotted 3 mmD** | **S** | 10,13,**16**,22,25 |

**SHAFT LENGTH (FMS)** / **AVAILABLE ONLY IN BUSHING**

| Code | Description | Code |
|---|---|---|
| 12 | 3/8 ” | B, C |
| 16 | 1/2 ” | A, C |
| 20 | 5/8 ” | A, C, F |
| **24** | **3/4 ”** | **A, C, F** |
| **28** | **7/8 ”** | **A, C, F** |
| 32 | 1 ” | A, C, F |
| **Metric** | | |
| 10 | 10 mm | R, S, U, T |
| 13 | 13 mm | R, S, U, T |
| **16** | **16 mm** | **R, S, U, T** |
| 22 | 22 mm | R, S, U, T |
| **25** | **25 mm** | **R, S, U, T** |

*Boldface features are Bourns standard options. All others are available with higher minimum order quantities.*

REV. 09/22/10

Specifications are subject to change without notice.
Customers should verify actual device performance in their specific applications.