MICRO SWITCH
A DIVISION OF MINNEAPOLIS-HONEYWELL REGULATOR COMPANY
FREEPORT, ILLINOIS
FED. MFR. CODE 91929

SWITCH – TOGGLE (MAGNETIC HOLD-IN)

CATALOG LISTING
2ET6-S
81205-10-60112-1

SKETCH 20410 ISSUE 1
REPLACES
RELEASE NO. SR 7754
M 2ET6-S PAGE 1 OF 1
DRAWING NUMBER
ISSUE 16

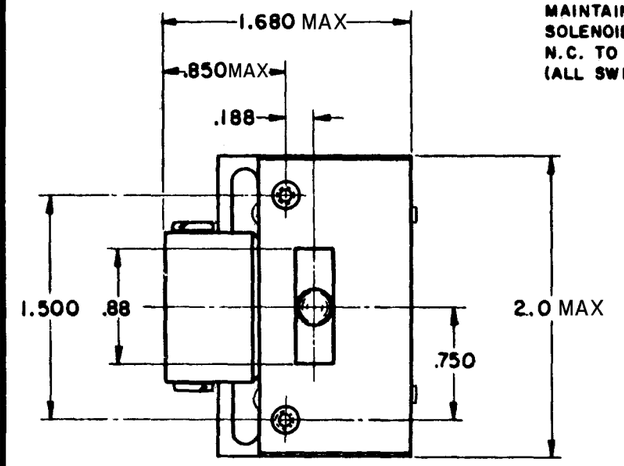

MAINTAINED POSITION WHEN SOLENOID IS DE-ENERGIZED
N.C. TO C. CIRCUITS MADE
(ALL SWITCHES)

POSITION A (MAINTAINED WHEN SOLENOID IS ENERGIZED)
N.O. TO C. CIRCUITS MADE (SWITCHES 3 AND 4)
N.C. TO C. CIRCUITS MADE (SWITCHES 1 AND 2)

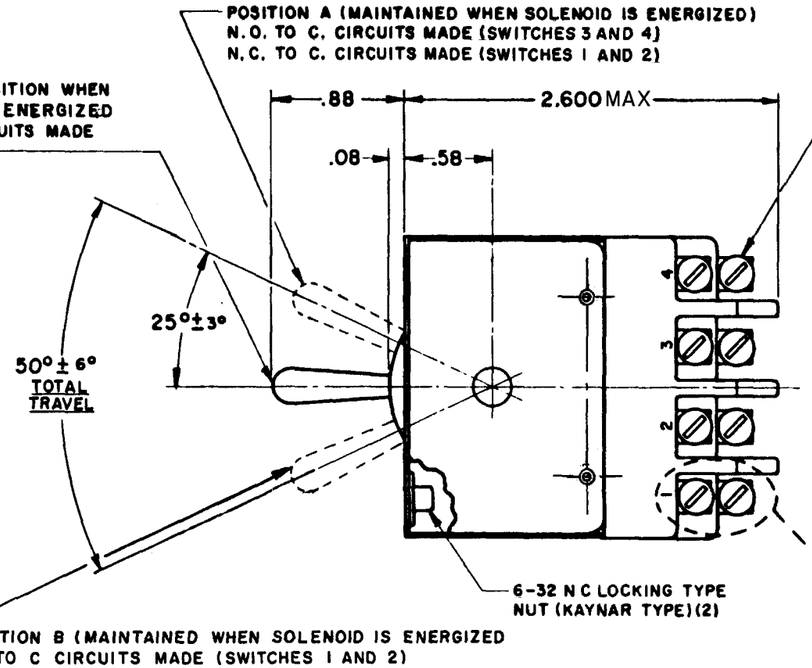

6-32 NC-2A X .250 REF ROUND HEAD TERMINAL SCREW, SPRING LOCKWASHER AND WASHER (14) WILL ACCEPT TYPE MS25036-1 TERMINATION

6-32 N C LOCKING TYPE NUT (KAYNAR TYPE)(2)

POSITION B (MAINTAINED WHEN SOLENOID IS ENERGIZED
N O TO C CIRCUITS MADE (SWITCHES 1 AND 2)
N C TO C CIRCUITS MADE (SWITCHES 3 AND 4)

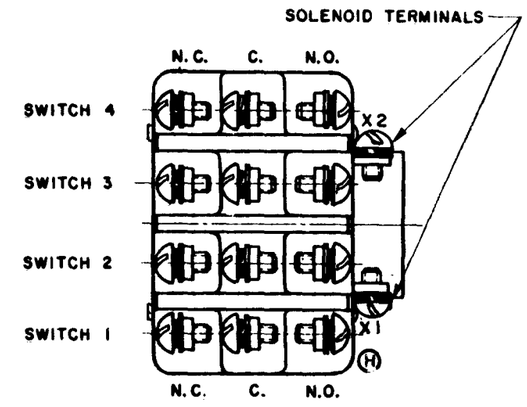

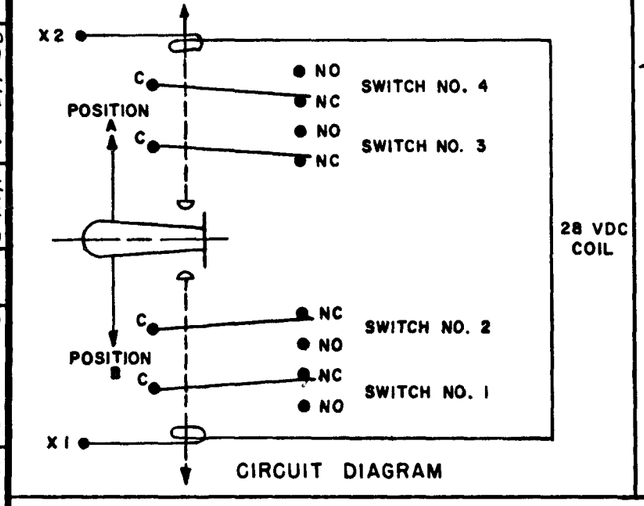

CIRCUIT DIAGRAM

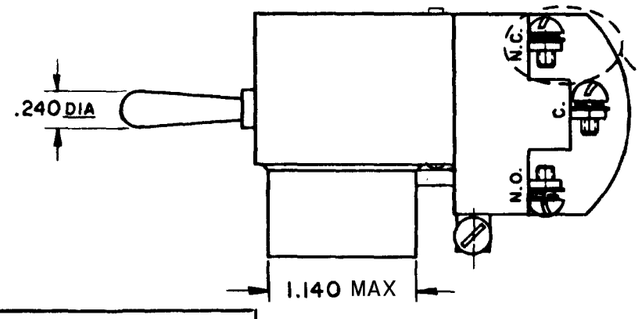

NOTES
1 – UNIT INCLUDES (4) SM TYPE BASIC SWITCH
2 – SWITCHES DO NOT NECESSARILY OPERATE SIMULTANEOUSLY

THIS DRAWING COVERS A PROPRIETARY ITEM AND IS THE PROPERTY OF MICRO SWITCH, A DIVISION OF MINNEAPOLIS-HONEYWELL REGULATOR CO. THIS DRAWING IS NOT TO BE COPIED OR USED WITHOUT THE APPROVAL OF MICRO SWITCH.

CHARACTERISTICS

SOLENOID CIRCUIT AT 20° C
STEADY STATE LIMITS ——— 20–29 VDC
OPERATING VOLTAGE — — — 10 TO 30 VDC
DROPOUT VOLTAGE — — — — — 0–10 VDC
COIL RESISTANCE — — — — 180 OHMS MIN

MECHANICAL DATA
OPERATING FORCE — — — — — — 2 LB MAX
OVER RIDE FORCE — 16 OZ MIN AT 24 VDC

ELECTRICAL DATA

CONTACT ARRANGEMENT
S.P.D.T. (4)

250 VAC — — — — — — — — — — — — — — — 5 AMP
30 VOLTS DC RATING
INDUCTIVE — — — — — — SEA LEVEL — — — 3 AMP
50,000 FT. — — 2.5 AMP
RESISTIVE — — — — — — SEA LEVEL — — — 5 AMP
50,000 FT. — — 5 AMP

SCALE FULL
DO NOT SCALE PRINT

UNLESS OTHERWISE SPECIFIED
DIMENSIONS ARE IN INCHES
TOLERANCES ARE:

ONE PLACE	(.0)	±.030
TWO PLACE	(.00)	±.015
THREE PLACE	(.000)	±.005
ANGLES		±

WEIGHT 7.5 OZ MAX

REVISIONS

A	200820	D L T 17 JUL 00
B	203841	JLH 5SEP01

DRAWN	R. E. R.	11 SEPT 58
CHECK	G. C. H.	16 SEPT 58
CHECK	J. R. H.	16 SEPT 58
CHECK		

RASTER
FO-80378.003

MICRO SWITCH
A DIVISION OF MINNEAPOLIS-HONEYWELL REGULATOR COMPANY
FREEPORT, ILLINOIS
FED. MFR. CODE 91929

SWITCH – TOGGLE (MAGNETIC HOLD-IN)

CATALOG LISTING
2ET6-S
BAC-10-60112-1

SKETCH 20410
ISSUE 1
REPLACES
RELEASE NO. SR 7754
DRAWING NUMBER M 2ET6-S
PAGE 1 OF 1
ISSUE 15

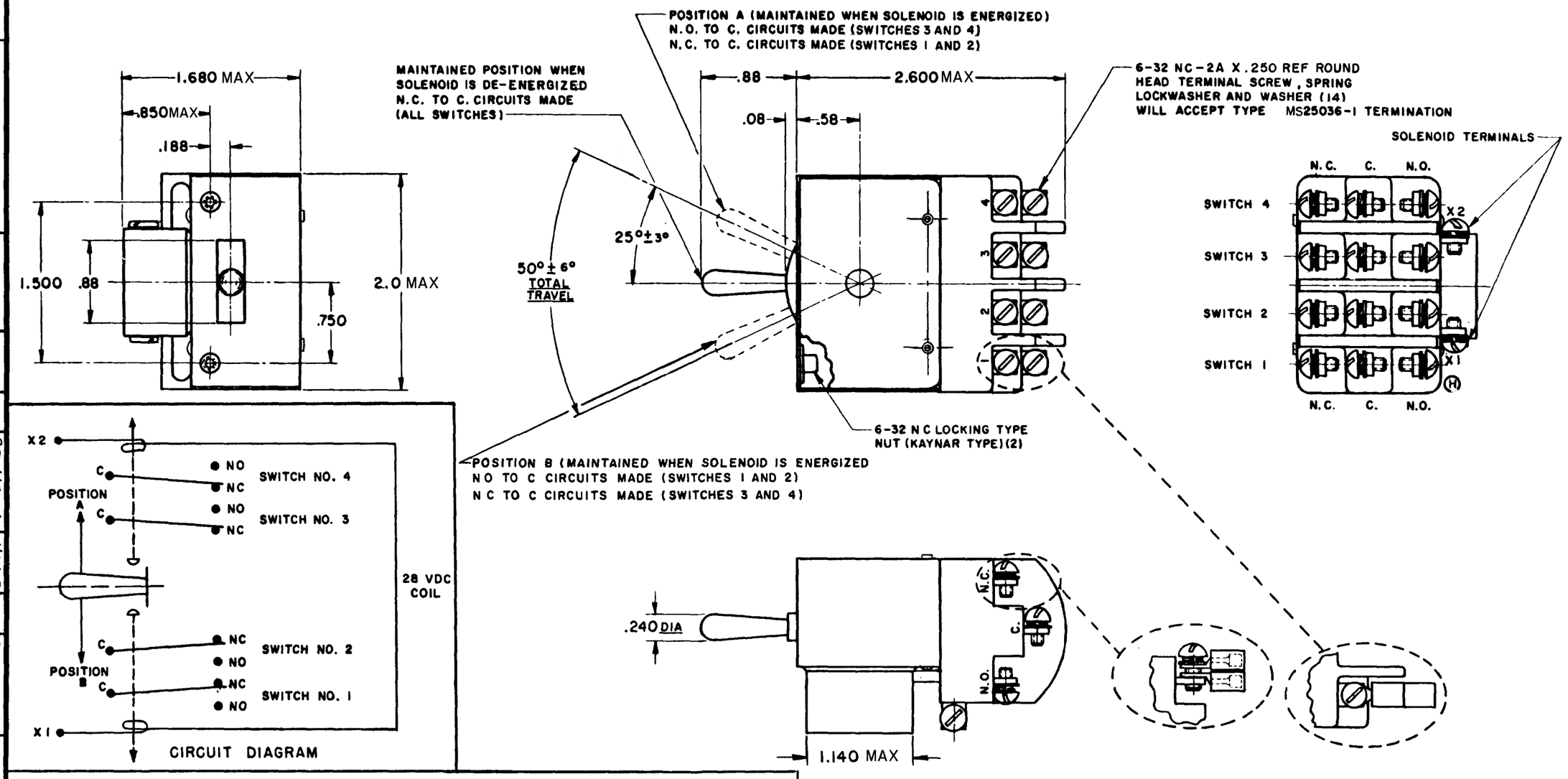

NOTES
1- UNIT INCLUDES (4) SM TYPE BASIC SWITCH
2- SWITCHES DO NOT NECESSARILY OPERATE SIMULTANEOUSLY

THIS DRAWING COVERS A PROPRIETARY ITEM AND IS THE PROPERTY OF MICRO SWITCH, A DIVISION OF MINNEAPOLIS-HONEYWELL REGULATOR CO. THIS DRAWING IS NOT TO BE COPIED OR USED WITHOUT THE APPROVAL OF MICRO SWITCH.

CHARACTERISTICS

SOLENOID CIRCUIT AT 20° C
STEADY STATE LIMITS ——— 20–29 VDC
OPERATING VOLTAGE ——— 10 TO 30 VDC
DROPOUT VOLTAGE ——— 0–10 VDC
COIL RESISTANCE ——— 180 OHMS MIN

MECHANICAL DATA
OPERATING FORCE ——— 2 LB MAX
OVER RIDE FORCE — 16 OZ MIN AT 24 VDC

ELECTRICAL DATA

CONTACT ARRANGEMENT
S.P.D.T. (4)

250 VAC ——— 5 AMP
30 VOLTS DC RATING
INDUCTIVE ——— SEA LEVEL ——— 3 AMP
50,000 FT. ——— 2.5 AMP
RESISTIVE ——— SEA LEVEL ——— 5 AMP
50,000 FT. ——— 5 AMP

SCALE FULL
DO NOT SCALE PRINT
UNLESS OTHERWISE SPECIFIED
DIMENSIONS ARE IN INCHES
TOLERANCES ARE:

ONE PLACE	(.0)	±.030
TWO PLACE	(.00)	±.015
THREE PLACE	(.000)	±.005
ANGLES		±

WEIGHT 7.5 OZ MAX

REVISIONS
A 200820
DLT 17 JUL 00

CHECK	J.R.H	16 SEPT 58
CHECK	G.C.H	16 SEPT 58
CHECK		
DRAWN	R. E. R.	11 SEPT 58

FORMTEK
FO-80378.003