MICRO SWITCH
FREEPORT, ILLINOIS, U.S.A.
A DIVISION OF HONEYWELL
FED. MFG. CODE 91929

DISPLAY SCREENS

CATALOG LISTING
2A SERIES CHART 7

THIS DRAWING COVERS A PROPRIETARY ITEM AND IS THE PROPERTY OF MICRO SWITCH, A DIVISION OF HONEYWELL. THIS DRAWING IS NOT TO BE COPIED OR USED WITHOUT THE APPROVAL OF MICRO SWITCH.

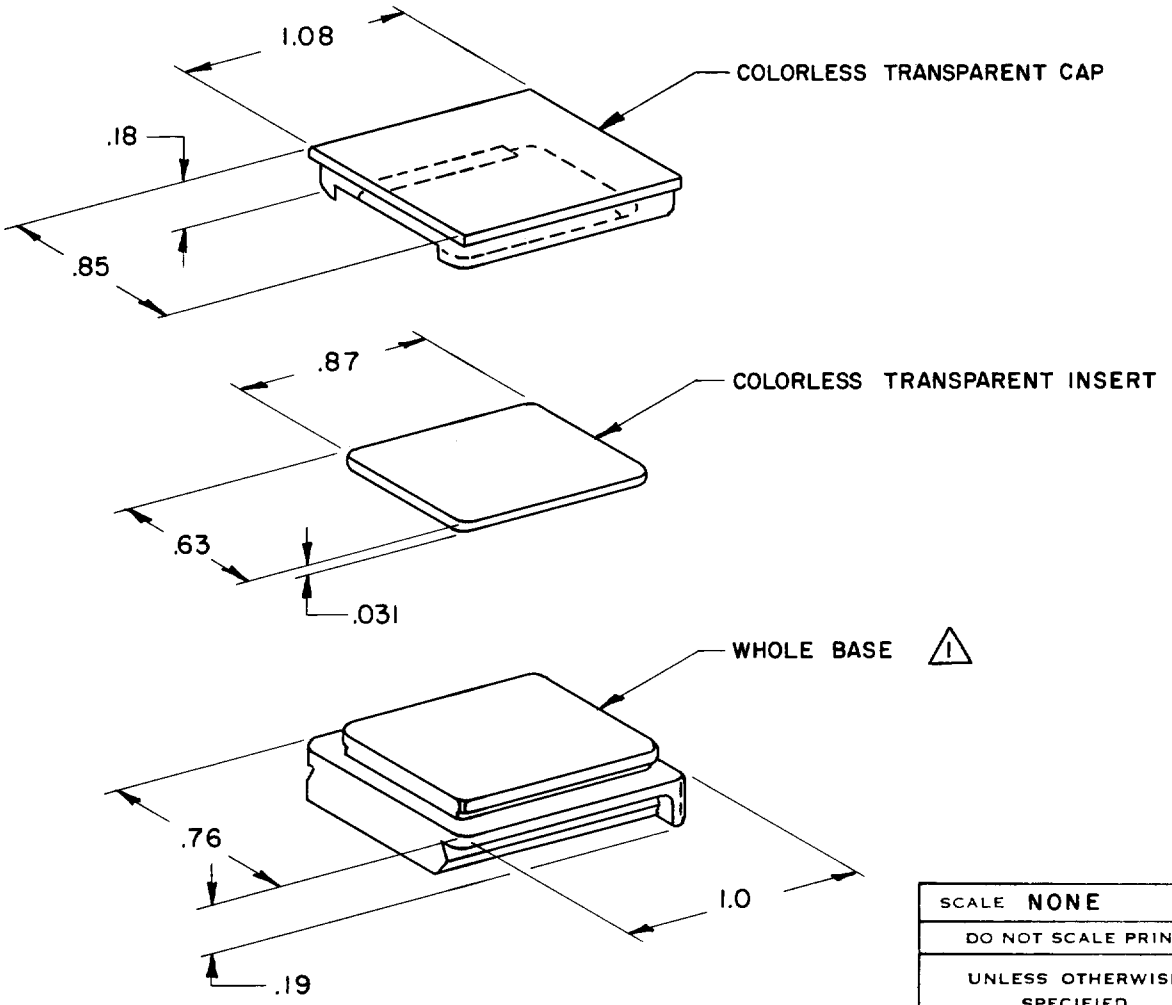

3 - PIECE DISPLAY SCREEN

NOTE-
1 - SOLID COLOR BASE FURNISHED WITH COLORLESS TRANSPARENT CAPS

SCALE NONE
DO NOT SCALE PRINT
UNLESS OTHERWISE SPECIFIED
DIMENSIONS ARE IN INCHES
TOLERANCES ARE:

ONE PLACE	(.0)	±.030
TWO PLACE	(.00)	±.015
THREE PLACE	(.000)	±.005
ANGLES		±

WEIGHT

BASE COLORS	CATALOG LISTINGS	RELEASE STATUS	
RED	2A81	SR-8284	
YELLOW	2A82	SR-8284	
GREEN	2A85	SR-8284	
BLUE	2A86	SR-8284	
AMBER	2A114	SR-9397	

2A SERIES CHART 7 ★
REPLACES
M
RELEASE NO.
DRAWING NUMBER
3
ISSUE
CHECK

REVISIONS
A NEW DRW C024543 G F S 4 SEPT 68

CHECK
3 SEP 68
LSD
CHECK
4 SEPT 68
DRAWN
G F S

FO-50378-2A