CONTROLLED AVALANCHE RECTIFIER

12QF11 1200V 12A

MAXIMUM RATINGS

CHARACTERISTIC		SYMBOL	RATING	UNIT
Repetitive Peak Reverse Voltage	12LF11	V_{RRM}	800	V
	12NF11		1000	
	12QF11		1200	
Peak Reverse Power Dissipation (t_W=10μs) T_a=25°C		P_{RSM}	3.8	kW
Average Forward Current (T_C=135°C)		$I_{F(AV)}$	12	A
Peak One Cycle Surge Forward Current (Non-Repetitive)		I_{FSM}	240(50Hz)	A
Junction Temperature		T_j	−40~175	°C
Storage Temperature Range		T_{stg}	−40~175	°C
Stud Torque			30	kgcm

Unit in mm

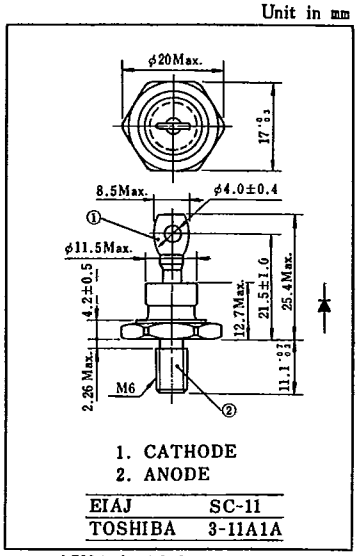

AC32 is furnished as an accessory.

ELECTRICAL CHARACTERISTICS

CHARACTERISTIC		SYMBOL	CONDITION	MIN.	MAX.	UNIT
Avalanche Break Breakdown Voltage	12LF11	V_Z	I_{RRM}=5mA, T_a=25°C	1000	1300	V
	12NF11			1250	1550	
	12QF11			1500	1900	
Peak Forward Voltage		V_{FM}	V_{RRM}=50A, T_a=25°C	−	1.5	V
Repetitive Peak Reverse Current	12LF11	I_{RRM}	V_{RRM}=Rated, T_j=175°C	−	2.0	mA
	12NF11				1.75	
	12QF11				1.5	
Thermal Resistance (Note 1)		$R_{th(j-c)}$	DC	−	2	°C/W

Notes : 1. Junction to Case.
2. At the series operation parallel capacitors (0.01μF) to the device are recommended to attach.
3. Consider the heat radiation including reverse power dissipation.

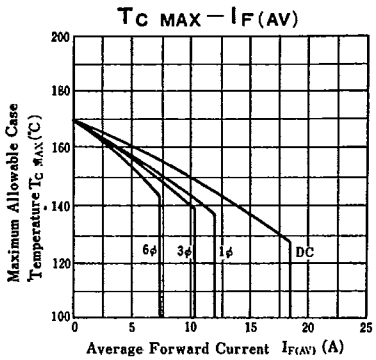

12FXF12 3000V 12A

MAXIMUM RATINGS

CHARACTERISTIC	SYMBOL	RATING	UNIT
Repetitive Peak Reverse Voltage	V_{RRM}	3000	V
Peak Reverse Power Dissipation (t_W=10μs) T_a=25°C	P_{RSM}	3.8	kW
Average Forward Current (T_C=140°C)	$I_{F(AV)}$	12	A
Peak One Cycle Surge Forward Current (Non-Repetitive)	I_{FSM}	240(50Hz)	A
Junction Temperature	T_j	−40~175	°C
Storage Temperature Range	T_{stg}	−40~175	°C
Stud Torque		30	kgcm

Unit in mm

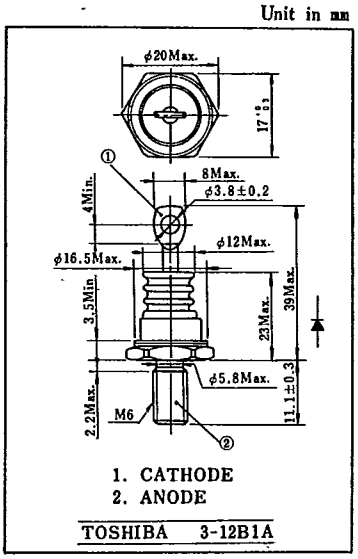

AC32 is furnished as an accessory.

ELECTRICAL CHARACTERISTICS

CHARACTERISTIC	SYMBOL	CONDITION	MIN.	MAX.	UNIT
Avalanche Break Breakdown Voltage	V_Z	I_{RRM}=5mA, T_a=25°C	3300	4200	V
Peak Forward Voltage	V_{FM}	I_{FM}=40A, T_a=25°C	−	1.40	V
Repetitive Peak Reverse Current	I_{RRM}	I_{RRM}=Rated, T_j=175°C	−	7.0	mA
Thermal Resistance (Note 1)	$R_{th(j-c)}$	DC	−	1.5	°C/W

Notes : 1. Junction to Case.
2. At the series operation parallel capacitors (0.01μF) to the device are recommended to attach.
3. Consider the heat radiation including reverse power dissipation.