Jun.1.2019 Copyright 2019 HIROSE ELECTRIC CO., LTD. All Rights Reserved.
In case of consideration for using Automotive equipment / device which demand high reliability, kindly contact our sales window correspondents.

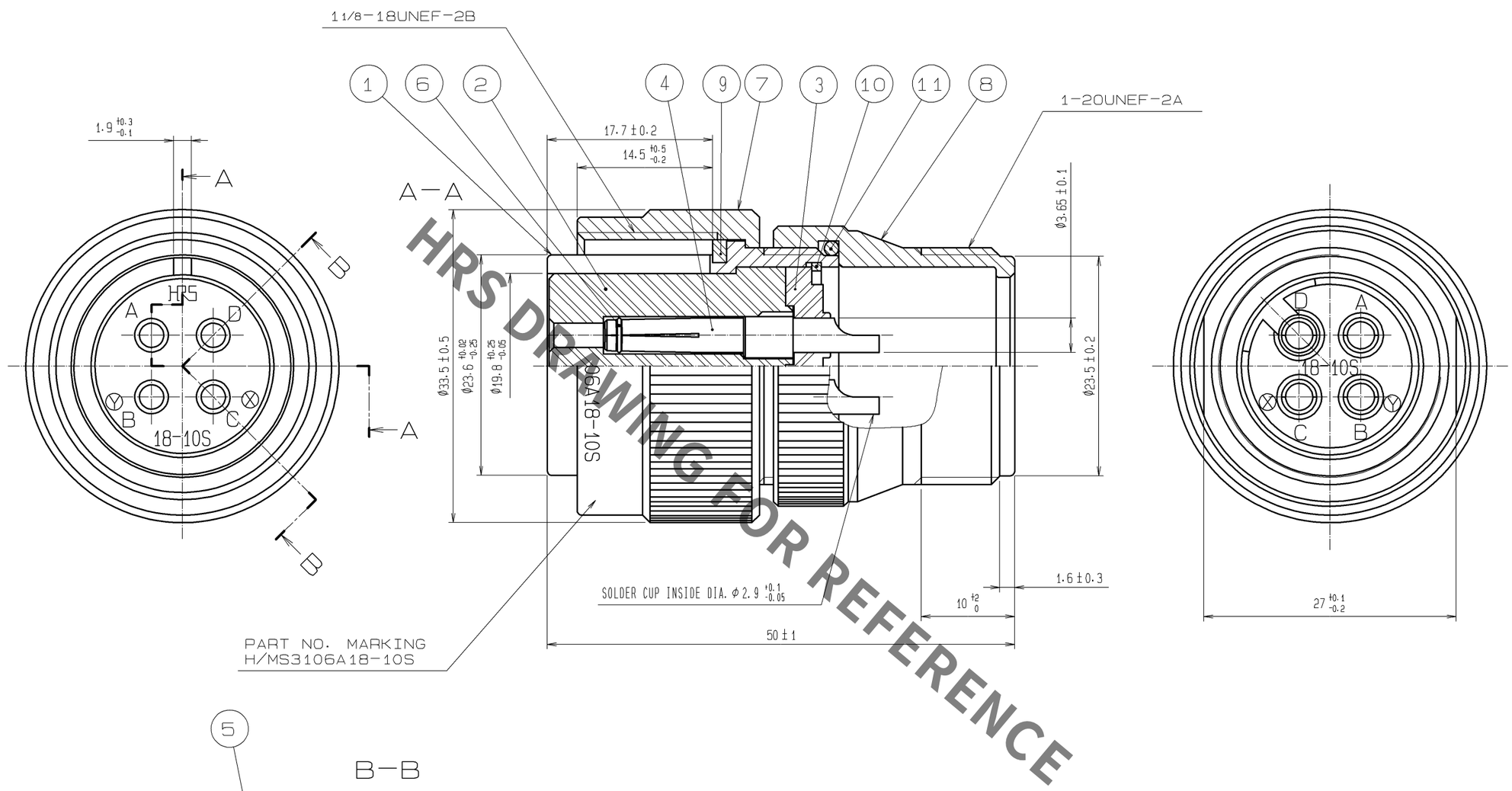

HRS DRAWING FOR REFERENCE

NOTE 1 ONE EXAMPLE OF THE ROTATION OF REF. ⑧ TO REF. NO. ① IS SHOWN.

NO.	MATERIAL	FINISH , REMARKS	NO.	MATERIAL	FINISH , REMARKS
6	STAINLESS STEEL				
5	PHOSPHOR BRONZE	SILVER PLATING 4μm min.	11	SILICONE RUBBER	(BLACK)
4	PHOSPHOR BRONZE	SILVER PLATING 4μm min.	10	PHOSPHOR BRONZE	NICKEL PLATING
3	POLYPHENYLENE SULFIDE	(BLACK) UL94V-0	9	SILICONE RUBBER	(BLACK)
2	POLYPHENYLENE SULFIDE	(BLACK) UL94V-0	8	ALUMINUM ALLOY	BLACK CHROMATE TREATMENT (TRIVALENT CHROMIUM)
1	ALUMINUM ALLOY	BLACK CHROMATE TREATMENT (TRIVALENT CHROMIUM)	7	ALUMINUM ALLOY	BLACK CHROMATE TREATMENT (TRIVALENT CHROMIUM)

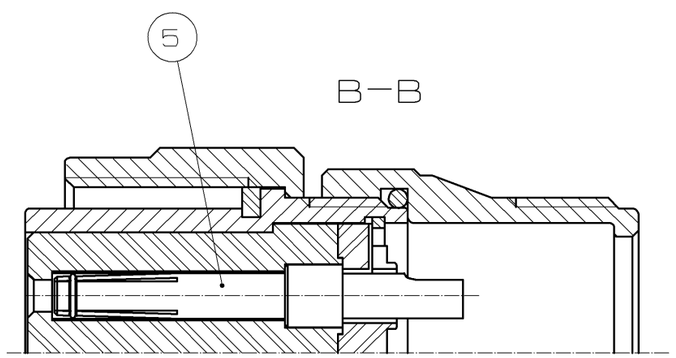

UNITS	SCALE	COUNT	DESCRIPTION OF REVISIONS	DESIGNED	CHECKED	DATE
mm	2 : 1	△				

HRS HIROSE ELECTRIC CO., LTD.

APPROVED	: EJ. KUNII	13. 07. 29	DRAWING NO.	EDC3-048960-73
CHECKED	: HY. KISHI	13. 07. 29	PART NO.	H/MS3106A18-10S(73)
DESIGNED	: HK. NAMAI	13. 07. 25	CODE NO.	CL120-0605-4-73
DRAWN	: HK. NAMAI	13. 07. 25		△ 1/1

FORM HC0011-5-7