Automotive Splashproof Connectors

Series 9215 – Branch Connectors

Housing

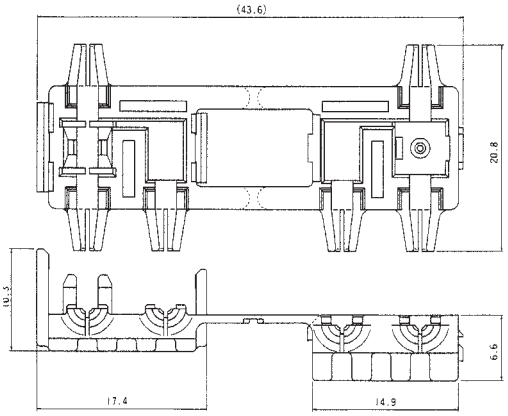

Contact

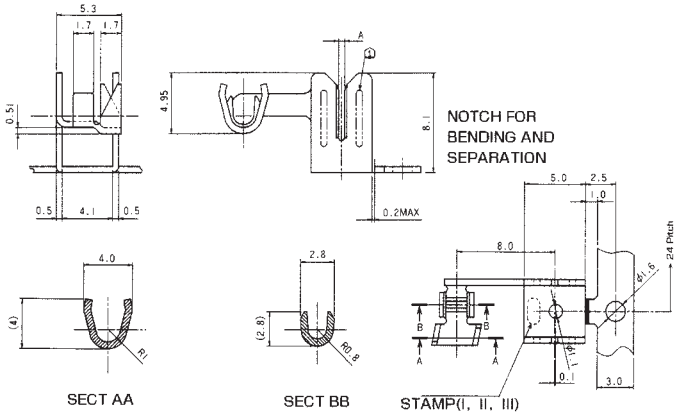

ORDERING CODE

60 9215 001 010 00X

VARIATION CODE

0 = 0.85sq (white)
1 = 0.5sq (black)
6 = 0.3sq (blue)

ORDERING CODE

70 9215 999 00X 825

VARIATION CODE (IDC)
AVS 0.5 (Crimping side area)

0 = 0.5sq
1 = 0.85sq
2 = 0.3sq

Series 9515 Connectors

Plug

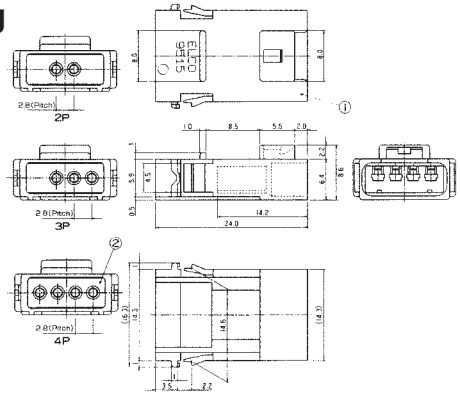

Receptacle

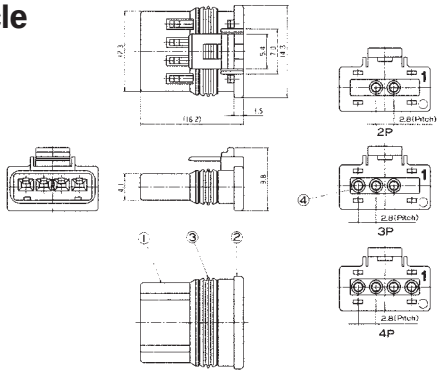

PLUG HOUSING ORDERING CODE

61 9515 004 000 001

HARD SEAL (B) ORDERING CODE

92 9515 004 XXX XXX

NUMBER OF POSITIONS - Color
012 002 = (2P/Blue), 013 003 = (3P/Yellow), 014 004 = (4P/Red)

TOOLING

Auto Crimping Machine	
Press Machine	36 1004 001
Applicator	36 1000 044
Press Capacity	2 (tons)
Dimension	W550xH700xD380
Weight	85kg
Power	AC100V 50/60Hz

PLUG CONTACT ORDERING CODE

71 9515 999 010 808

RECEPTACLE CONTACT ORDERING CODE

72 9515 999 020 808

RECEPTACLE HOUSING ORDERING CODE

62 9515 004 010 001

CAP ORDERING CODE

62 9515 004 020 001

HARD SEAL (A) ORDERING CODE

92 9515 004 000 003

HARD SEAL (C) ORDERING CODE

92 9515 004 XXX XXX

NUMBER OF POSITIONS
002 002 = (2P) 003 003 = (3P) 004 004 = (4P)

Contact Plug

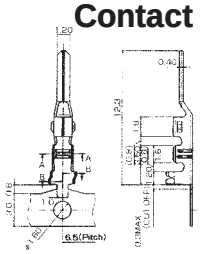

Receptacle

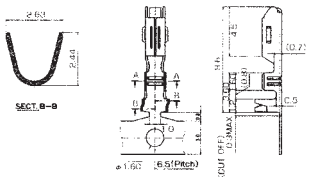

Additional information on this product is available from AVX's catalog or AVX's FAX Service.
Call 1-800-879-1613 and request document **#346**. Visit our website http://www.avxcorp.com

ELCO