Holder / No. 824-20

Panel Mount for 5x20mm Fuses

Panel mounting hole

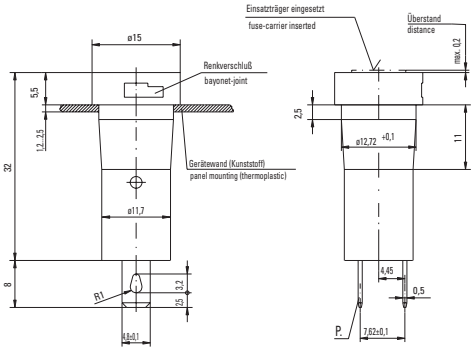

Cap / No. 835-20

Flush Mount Type

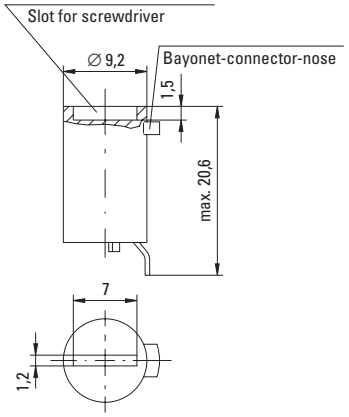

Specifications

Standard
IEC 60127-6
UL 512
CSA C22.2. No.39

Mounting
Pluggable (panel thickness 1.2 mm-2.5 mm)

Terminals
Solderable or 4.8mm quick connect - fits 0.5mm tab

Protection Class & Category
IP 40 (IEC 60529)
PC2 (IEC 60127-6)

Materials
Holder/Cap: Thermoplastic (Polyamide PA 6.6), UL94 V-0, white
Metal Parts: Copper alloy, corrosion protected
Terminals: solderable tinned

Electrical Data (23°C)
Rated Voltage: 250V
Rated Current: 6.3A (VDE/SEMKO)
16A (UL/CSA)
Rated Power : 4W (VDE/SEMKO)

Operating Temperature
-25°C to +70°C (consider de-rating)

Climatic Test
-25°C/+70°C/21 days (IEC 60068-2-1...3)

Stock Conditions
+10°C to +60°C
relative humidity ≤ 75% yearly average,
without dew, maximum value for 30 days - 95%

Vibration Resistance
24 cycles at 15 min. each (IEC 60068-2-6)
10 - 60Hz at 0.75mm amplitude
60 - 2000Hz at 10g acceleration

Contact Resistance
≤5mΩ

Dielectric Strength
> 1.5 kV

Impulse Voltage
4 kV, 50Hz, 1 min., dry

Insulation Resistance
> 10^3 MΩ (500VDC, 1 min.)

Solderability
235°C, 3 sec. (Wave)
350°C, 1 sec. (soldering iron)

Soldering Heat Resistance
260°C, 5 sec. (IEC 60068-2-20)

Minimum Cross Section
Conductor - 2.5mm^2

Marking
824, 250V, Approvals

Unit Weight
3.3g (824) / 1.6g (835) / 2.2g (837)

Order Information

Packaging
Bulk (100 pcs.)

Order Numbers

Holder	No. 824 0000 020
Cap, Flush Mount	No. 835 0000 020

Note: 1.00 means the number one with two decimal places. 1,000 means the number one thousand.

WICKMANN

In our continuing strategy to deliver unparalleled circuit protection solutions, technical expertise and application leadership, we proudly introduce the WICKMANN Group and its products to the Littelfuse portfolio.

www.littelfuse.com